STORMWATER MANAGEMENT ORDINANCE

TOWN OF GRIFFITH, INDIANA

OCTOBER, 2010

ABBREVIATED TABLE OF CONTENTS

Chapter	*Title*	*Page*
I	**GENERAL INFORMATION**	**1**
II	**PROHIBITED DISCHARGES AND CONNECTIONS**	**5**
III	**STORMWATER QUANTITY MANAGEMENT**	**6**
IV	**STORMWATER POLLUTION PREVENTION FOR CONSTRUCTION SITES**	**13**
V	**STORMWATER QUALITY MANAGEMENT FOR POST-CONSTRUCTION**	**17**
VI	**DEVELOPMENT IN WETLANDS REGULATIONS**	**20**
VII	**AS-BUILT PLANS & MAINTENANCE BOND**	**22**
VIII	**ENFORCEMENT**	**23**

Appendices

A	**ABBREVIATIONS AND DEFINITIONS**
B	**Illicit Discharge and Connection Stormwater Ordinance**
C	**Erosion and Sediment Control Ordinance**
D	**Town of Griffith Stormwater Technical Standards Manual**

EXPANDED TABLE OF CONTENTS

CHAPTER ONE — Page

GENERAL INFORMATION — **1**

Sections

1. AUTHORITY AND TITLE — 1
2. APPLICABILITY AND EXEMPTIONS — 1
3. BACKGROUND — 1
4. FINDINGS — 2
5. PURPOSE — 2
6. ABBREVIATIONS AND DEFINITIONS — 3
7. RESPONSIBILITY FOR ADMINISTRATION — 3
8. CONFLICTING ORDINANCES — 3
9. INTERPRETATION — 3
10. SEVERABILITY — 3
11. EFFECTIVE DATE — 3
12. DISCLAIMER OF LIABILITY — 4

CHAPTER TWO — Page

PROHIBITED DISCHARGES AND CONNECTIONS — **5**

Sections

1. APPLICABILITY AND EXEMPTIONS — 5
2. ILLICIT DISCHARGE AND CONNECTION STORMWATER ORDINANCE — 5

CHAPTER THREE — Page

STORMWATER QUANTITY MANAGEMENT — **6**

Sections

1. APPLICABILITY AND EXEMPTIONS — 6
2. POLICY ON STORMWATER QUANTITY MANAGEMENT — 6
3. CALCULATIONS AND DESIGN STANDARDS AND SPECIFICATIONS — 9
4. STORMWATER DRAINAGE TECHNICAL REPORT — 10
5. DRAINAGE EASEMENT REQUIREMENTS — 11
6. PLACEMENT OF UTILITIES — 12
7. STRUCTURES NEAR COUNTY REGULATED DRAINS — 12
8. INSPECTION, MAINTENANCE, RECORD KEEPING, AND REPORTING — 12

CHAPTER FOUR — Page

STORMWATER POLLUTION PREVENTION FOR CONSTRUCTION SITES — **13**

Sections

1. APPLICABILITY AND EXEMPTIONS — 13
2. EROSION AND SEDIMENT CONTROL ORDINANCE — 13
3. POLICY ON STORMWATER POLLUTION PREVENTION — 13
4. CALCULATIONS AND DESIGN STANDARDS AND SPECIFICATIONS — 15

CHAPTER FIVE — Page

STORMWATER QUALITY MANAGEMENT FOR POST-CONSTRUCTION — **17**

Sections

1. APPLICABILITY AND EXEMPTIONS — 17
2. POLICY ON STORMWATER QUALITY MANAGEMENT — 17
3. CALCULATIONS AND DESIGN STANDARDS AND SPECIFICATIONS — 18
4. EASEMENT REQUIREMENTS — 18
5. INSPECTION, MAINTENANCE, RECORD KEEPING, AND REPORTING — 18

CHAPTER SIX — Page

DEVELOPMENT IN WETLANDS REGULATIONS — **20**

Sections

1. APPLICABILITY AND EXEMPTIONS — 20
2. POLICY ON WETLANDS DISTURBANCE PREVENTION — 20
3. WETLANDS IDENTIFICATION — 20

CHAPTER SEVEN — Page

AS-BUILT PLANS & MAINTENANCE BOND — **22**

Sections

1. CERTIFICATION OF AS-BUILT PLANS — 22
2. MAINTENANCE BOND — 22

CHAPTER EIGHT — Page

ENFORCEMENT — **23**

Sections

1. COMPLIANCE WITH THIS ORDINANCE — 23
2. PENALTIES FOR VIOLATIONS — 23
3. STOP WORK ORDER — 23
4. FAILURE TO COMPLY OR COMPLETE — 24
5. SUSPENSION OF ACCESS TO THE STORM DRAIN SYSTEM — 24
6. CORRECTIVE ACTION — 24
7. APPEALS — 24

CHAPTER ONE

GENERAL INFORMATION

1. AUTHORITY AND TITLE

This Ordinance is adopted in accordance with statutory authority granted to the Town of Griffith under "Home Rule" as well as the "Indiana Drainage Code", and further is required by IC 36-9-28.5, IC 36-9-27-69.5, Phase II of the National Pollution Discharge Elimination System program (FR Doc. 99–29181) authorized by the 1972 amendments to the Clean Water Act, the Indiana Department of Environmental Management's Rule 13 (327 IAC 15-13), and the Indiana Department of Environmental Management's Rule 5 (327 IAC 15-5). Based on this authority and these requirements, this Ordinance regulates:

A. Discharges of prohibited non-stormwater flows into the stormwater drainage system.
B. Stormwater drainage improvements related to development of lands located within The Town of Griffith, Indiana.
C. Drainage control systems installed during new construction and grading of lots and other parcels of land.
D. Erosion and sediment control systems installed during new construction and grading of lots and other parcels of land.
E. The design, construction, and maintenance of stormwater drainage facilities and systems.
F. The design, construction, and maintenance of stormwater quality facilities and systems.
G. Land disturbing activities affecting wetlands.

This Ordinance shall be known and may be cited as the Town of Griffith Stormwater Management Ordinance.

2. APPLICABILITY AND EXEMPTIONS

This Ordinance shall regulate all development and redevelopment occurring within the Town of Griffith, Indiana, falling under the jurisdiction of the Town of Griffith government and any significant discharge into the Town's stormwater conveyance facilities. In addition to the requirements of this Ordinance, compliance with the requirements set forth in local Zoning Ordinances is also necessary. Compliance with all applicable ordinances of The Town of Griffith as well as with applicable Federal or State of Indiana statues and regulations shall also be required. Unless otherwise stated, all other specifications referred to in this Ordinance shall be the most recent edition available.

The Town of Griffith has the authority to modify, grant exemptions, and/or waive any and all the requirements of this Ordinance and its associated technical standards document. A pre-submittal meeting with the Town may be requested by the applicant to discuss the applicability of various provisions of the Ordinance and its associated technical standards document with regards to unique or unusual circumstances relating to a project. However, any initial determination of such applicability shall not be binding on future determinations of the Town that may be based on the review of more detailed information and plans.

3. BACKGROUND

On December 8, 1999, Phase II of the National Pollutant Discharge Elimination System (NPDES) permit program, was published in the Federal Register. The NPDES program, as authorized by the 1972 amendments to the Clean Water Act, controls water pollution by regulating point sources that discharge

pollutants into waters of the United States. Phase II of NPDES requires permit coverage for stormwater discharges from regulated small municipal separate storm sewer systems (MS4s) and for small construction activity that results in the disturbance of equal to or greater than one acre. This Federal regulation went into affect March 10, 2003. In response to Phase II of NPDES, the Indiana Department of Environmental Management enacted Rule 13 (327 IAC 15-13) and revised Rule 5 (327 IAC 15-5).

Under these new State and Federal regulations, The Town of Griffith is required to implement a regulatory mechanism for stormwater management. Therefore, this document "The Stormwater Management Ordinance of the Town of Griffith" was established to regulate stormwater quality and quantity.

4. FINDINGS

The Town of Griffith Town Council finds that:

A. Water bodies, roadways, structures, and other property within, and downstream of The Town of Griffith are at times subjected to flooding;
B. Flooding is a danger to the lives and property of the public and is also a danger to the natural resources of the region;
C. Land development alters the hydrologic response of watersheds, resulting in increased stormwater runoff rates and volumes, increased flooding, increased stream channel erosion, and increased sediment transport and deposition;
D. Soil erosion resulting from land-disturbing activities causes a significant amount of sediment and other pollutants to be transported off-site and deposited in ditches, streams, wetlands, lakes, and reservoirs;
E. Increased stormwater runoff rates and volumes, and the sediments and pollutants associated with stormwater runoff from future development projects within The Town of Griffith will, absent reasonable regulation and control, adversely affect The Town's water bodies and water resources;
F. Pollutant contributions from illicit discharges within The Town of Griffith will, absent reasonable regulation, monitoring, and enforcement, adversely affect The Town of Griffith's water bodies and water resources;
G. Stormwater runoff, soil erosion, non-point source pollution, and illicit sources of pollution can be controlled and minimized by the regulation of stormwater management;
H. Adopting the standards, criteria, and procedures contained and referenced in this Ordinance and implementing the same will address many of the deleterious effects of stormwater runoff and illicit discharges;
I. Adopting this Ordinance is necessary for the preservation of the public health, safety, and welfare, for the conservation of our natural resources, and for compliance with State and Federal regulations.

5. PURPOSE

The purpose of this Ordinance is to provide for the health, safety, and general welfare of the citizens of The Town of Griffith through the regulation of stormwater and non-stormwater discharges to the storm drainage system and to protect, conserve and promote the coordinated development of land and water resources within The Town of Griffith. This Ordinance establishes methods for managing the quantity and quality of stormwater entering into the stormwater drainage system in order to comply with State and Federal requirements. The objectives of this Ordinance are:

A. To reduce the hazard to public health and safety caused by excessive stormwater runoff.
B. To regulate the contribution of pollutants to the stormwater drainage system from construction site runoff.
C. To regulate the contribution of pollutants to the stormwater drainage system and public waters from

runoff from new development and re-development.

D. To prohibit illicit discharges into the stormwater drainage system.
E. To establish legal authority to carry out all inspection, monitoring, and enforcement procedures necessary to ensure compliance with this ordinance.

6. ABBREVIATIONS AND DEFINITIONS

For the purpose of this Ordinance, the abbreviations and definitions provided in Appendix A shall apply.

7. RESPONSIBILITY FOR ADMINISTRATION

The Town of Griffith Storm Water Management Board shall administer, implement, and enforce the provisions of this Ordinance through the Town Engineer, MS4 Operator and the Plan Commission. Any powers granted or duties imposed upon the authorized enforcement agency may be delegated in writing by the Town of Griffith Storm Water Management Board to qualified persons or entities acting in the beneficial interest of or in the employ of The Town of Griffith government.

For projects directly impacting a Lake County Regulated Drain, both the Town of Griffith and the Lake County Plan Commission shall administer, implement, and enforce the provisions of this Ordinance.

8. CONFLICTING ORDINANCES

The provisions of this Ordinance shall be deemed as additional requirements to minimum standards required by other Town of Griffith ordinances, and as supplemental requirements to Indiana's Rule 5 regarding Stormwater Discharge Associated with Construction Activity, (327 IAC 15-5), and Indiana's Rule 13 regarding Stormwater Runoff Associated with Municipal Separate Storm Sewer System Conveyances (327 IAC 15-13). In case of conflicting requirements, the most restrictive shall apply. Existing Town of Griffith ordinances for Illicit Discharge and Connection and Erosion and Sediment Control are incorporated into this Ordinance.

9. INTERPRETATION

Words and phrases in this Ordinance shall be construed according to their common and accepted meanings, except that words and phrases defined in Appendix A shall be construed according to the respective definitions given in that section. Technical words and technical phrases that are not defined in this Ordinance but which have acquired particular meanings in law or in technical usage shall be construed according to such meanings.

10. SEVERABILITY

The provisions of this Ordinance are hereby declared severable, and if any court of competent jurisdiction should declare any part or provision of this Ordinance invalid or unenforceable, such invalidity or unenforceability shall not affect any other part or provision of the ordinance.

11. EFFECTIVE DATE

This Ordinance shall become effective after its final passage, approval, and publication as required by law.

12. DISCLAIMER OF LIABILITY

The degree of protection required by this Ordinance is considered reasonable for regulatory purposes and is based on historical records, engineering, and scientific methods of study. Larger storms may occur or stormwater runoff amounts and/or stormwater quality may be altered by man-made or natural causes. This Ordinance does not imply that land uses permitted will be free from stormwater damage. This Ordinance shall not create liability on the part of Town of Griffith Town Council, Town of Griffith Storm Water Management Board, the Town of Griffith Plan Commission, the Town Engineer, the Town of Griffith Department of Public Works, or any officer, representative, or employee thereof, for any damage which may result from reliance on this Ordinance or on any administrative decision lawfully made there under.

CHAPTER TWO

PROHIBITED DISCHARGES AND CONNECTIONS

1. APPLICABILITY AND EXEMPTIONS

This chapter shall apply to all discharges, including illegal dumping, entering the stormwater drainage system under the control of The Town of Griffith, regardless of whether the discharge originates from developed or undeveloped lands, and regardless of whether the discharge is generated from an active construction site or a stabilized site. These discharges include flows from direct connections to the stormwater drainage system, illegal dumping, and contaminated runoff.

Stormwater runoff from agricultural activities is exempted from the requirements of this chapter unless determined to contain pollutants not associated with such activities or in excess of standard practices. Farm residences are ***not*** included in this exemption.

Any non-stormwater discharge permitted under an NPDES permit, waiver, or waste discharge order issued to the discharger and administered under the authority of the Federal Environmental Protection Agency, provided that the discharger is in full compliance with all requirements of the permit, waiver, or order and other applicable laws and regulations, and provided that written acceptance has been granted for the subject discharge to the stormwater drainage system, is also exempted from this chapter.

2. ILLICIT DISCHARGE AND CONNECTION STORMWATER ORDINANCE

The Town of Griffith – Illicit Discharge and Connection Stormwater Ordinance No. 2008-02 was passed and adopted on January 15, 2008. A copy of this Ordinance is included in Appendix B. This Ordinance includes information on Discharge Prohibitions, Industrial or Construction Activity Discharges, Monitoring of Discharges, Notification of Spills, Enforcement, etc. The information contained in this chapter should be considered as supplementing the previously passed Ordinance No. 2008-02. In case of conflicting requirements, the most restrictive shall apply.

CHAPTER THREE

STORMWATER QUANTITY MANAGEMENT

1. APPLICABILITY AND EXEMPTIONS

The storage and controlled release rate of excess stormwater runoff shall be required for all new business, commercial and industrial developments, residential subdivisions, planned development, rural estate subdivisions, and any redevelopment or other new construction located within The Town of Griffith. The Town Engineer, after thorough investigation and evaluation, may waive the requirement of controlled runoff for minor subdivisions and parcelization. Additional exemptions regarding the detention requirements are provided under Section 2.A.v (below).

2. POLICY ON STORMWATER QUANTITY MANAGEMENT

A. Detention Policy

It is recognized that most streams and drainage channels serving The Town of Griffith do not have sufficient capacity to receive and convey stormwater runoff resulting from continued urbanization. Accordingly, except for situations provided in Sections v (below), the storage and controlled release of excess stormwater runoff shall be required for all developments and redevelopments (as defined in Appendix A) located within The Town of Griffith.

i. General Release Rates

In general, the post-development release rates for developments up to and including the 100-year return period storm may not exceed 0.2 cfs per acre of development. For sites where the pre-developed area has more than one (1) outlet, the release rate should be computed based on pre-developed discharge to each outlet point. The computed release rate for each outlet point shall not be exceeded at the respective outlet point even if the post developed conditions would involve a different arrangement of outlet points.

ii. Site-Specific Release Rates for Sites with Depressional Storage

For sites where depressional storage exists, the general release rates provided above may have to be further reduced. If depressional storage exists at the site, site-specific release rates must be calculated according to methodology described in the Town of Griffith Stormwater Technical Standards Manual (See Appendix D), accounting for the depressional storage by modeling it as a pond whose outlet is a weir at an elevation that stormwater can currently overflow the depressional storage area. Post developed release rate for sites with depressional storage shall be the 2-year pre-developed peak runoff rate for the post-developed 100-year storm. In no case shall the calculated site-specific release rates be larger than general release rates provided above.

Also note that for determining the post-developed peak runoff rate, the depressional storage must be assumed to be filled unless the Town of Griffith can be assured, through dedicated easement, that the noted storage will be preserved in perpetuity.

iii. Management of Off-site Runoff

Runoff from all upstream tributary areas (off-site land areas) may be bypassed around the detention/retention facility without attenuation. Such runoff may also be bypassed through the detention/retention facility without attenuation, provided that a separate outlet system or channel is incorporated for the safe passage of such flows, i.e., not through the

primary outlet of a detention facility. Unless the pond is being designed as a regional detention facility, the primary outlet structure shall be sized and the invert elevation of the emergency overflow weir determined according to the on-site runoff only. Once the size and location of primary outlet structure and the invert elevation of the emergency overflow weir are determined by considering on-site runoff, the 100-year pond elevation is determined by routing the entire inflow, on-site and off-site, through the pond.

Note that the efficiency of the detention/retention facility in controlling the on-site runoff may be severely affected if the off-site area is considerably larger than the on-site area. As a general guidance, on-line detention may not be effective in controlling on-site runoff where the ratio of off-site area to on-site area is larger than 5:1. Additional detention (above and beyond that required for on-site area) may be required by the Town when the ratio of off-site area to on-site area is larger than 5:1.

iv. Downstream Restriction

In the event the downstream receiving channel or storm sewer system is inadequate to accommodate the post-developed release rate provided above, then the allowable release rate shall be reduced to that rate permitted by the capacity of the receiving downstream channel or storm sewer system. Additional detention, as determined by the Town of Griffith, shall be required to store that portion of the runoff exceeding the capacity of the receiving storm sewers or watercourses. When such downstream restrictions are suspected, the Town may require additional analysis to determine the receiving system's limiting downstream capacity.

If the proposed development makes up only a portion of the undeveloped watershed upstream of the limiting restriction, the allowable release rate for the development shall be in direct proportion to the ratio of its drainage area to the drainage area of the entire watershed upstream of the restriction.

v. Direct Release Provisions

Due to unknowns regarding the future development patterns and the associated proposed stormwater quantity and quality management systems within a watershed, it is the policy of the Town of Griffith to discourage direct release of runoff from a new development or redevelopment without providing detention. However, in rare circumstances, where a comprehensive watershed-wide hydrologic study or watershed plan of a major stream adopted by the Town (not a "beat the peak" analysis) substantiates the benefits of (or allows for) direct release for a proposed development located adjacent to a major stream, the detention requirements set in this Ordinance may be waived. Other special circumstances when such a waiver may be considered by the Town include situations where the design of a regional pond has already taken into account the provision of direct release in certain areas in the watershed or when the subject development is immediately next to a major stream that has a larger than 100 square miles drainage area.

B. Grading and Building Pad Elevations

Maximum yard slopes are 3:1 where soil has been disturbed during construction processes. Finished floor elevation must be no less than 6 inches above finished grade and a minimum of 15 inches above an adjacent road elevation unless a written variance is granted by the Town of Griffith.

For all structures located in the Special Flood Hazards Area (SFHA) as shown on the FEMA maps, the lowest floor elevations of all residential, commercial, or industrial buildings, shall be

such that Lowest Floor elevation, including basement, shall be at the flood protection grade and therefore have 2 feet of freeboard above the 100-year flood elevation.

The Lowest Adjacent Grade for residential, commercial, or industrial buildings outside a FEMA or IDNR designated floodplain shall have two feet of freeboard above the flooding source's 100-year flood elevation under proposed conditions, unless the flooding source is a rear-yard swale. When the flooding source is a rear-yard swale, the Lowest Adjacent Grade for residential, commercial, or industrial buildings shall have 2 feet of freeboard above the 100-year flood elevation under proposed conditions.

For areas outside a FEMA or IDNR designated floodplain, the Lowest Adjacent Grade (including walkout basement floor elevation) for all residential, commercial, or industrial buildings adjacent to ponds shall be set a minimum of 2 feet above the 100-year pond elevation or 2 feet above the emergency overflow weir elevation, whichever is higher. In addition to the Lowest Adjacent Grade requirements, any basement floor must be at least a foot above the permanent water level (normal pool elevation).

The 100-year overflow paths throughout the development, whether shown on FEMA maps or not, must be shown as hatched area on the plans and 30 feet along the centerline of the flow path contained within permanent drainage easements. A statement shall be added to the plat that would refer the viewer to the construction plans to see the entire extent of overflow path as hatched areas. No fences or landscaping can be constructed within the easement areas that may impede the free flow of stormwater. These areas are to be maintained by the property owners or be designated as common areas that are to be maintained by the homeowners association. The Lowest Adjacent Grade for all residential, commercial, or industrial buildings shall be set a minimum of 1 foot above the noted overflow path/ponding elevation, calculated based on all contributing drainage areas, on-site and off-site, in their proposed or reasonably anticipated land use and with storm pipe system assumed completely plugged.

It shall be the property owners' responsibility to maintain the natural features on their lots and to take preventive measures against any and all erosion and/or deterioration of natural or manmade features on their lots.

C. Acceptable Outlet and Adjoining Property Impact Policies

Design and construction of the stormwater facility shall provide for the discharge of the stormwater runoff from off-site land areas as well as the stormwater from the area being developed (on-site land areas) to an acceptable outlet(s) (as determined by the Town of Griffith) having capacity to receive upstream (off-site) and on-site drainage. The flow path from the development outfall(s) to a regulated drain or natural watercourse (as determined by the Town) shall be provided on an exhibit that includes topographic information. Any existing field tile encountered during the construction shall also be incorporated into the proposed stormwater drainage system or tied to an acceptable outlet. In addition, no activities conducted as part of the development shall be allowed to obstruct the free flow of flood waters from an upstream property.

Where the outfall from the stormwater drainage system of any development flows through real estate owned by others prior to reaching a regulated drain or watercourse, no acceptance shall be granted for such drainage system until all owners of real estate and/or tenants crossed by the outfall consent in writing to the use of their real estate through a recorded easement.

If an adequate outlet is not located on site, then off-site drainage improvements may be required. Those improvements may include, but are not limited to, extending storm sewers, clearing, dredging and/or removal of obstructions to open drains or natural water courses, and the removal or replacement of undersized culvert pipes as required by the Town of Griffith.

D. No Net Loss Floodplain Storage Policy

Floodplains exist adjacent to all natural and man-made streams, regardless of contributing drainage area or whether they have been previously identified or mapped. Due to potential impacts of floodplain loss on peak flows in streams and on the environment, disturbance to floodplains should be avoided. When the avoidance of floodplain disturbance is not practical, the natural functions of floodplain should be preserved to the extent possible.

In an attempt to strike a balance between the legitimate need for economic development within The Town of Griffith and the need to preserve the natural functions of floodplains to the extent possible, compensatory excavation 1.5 times the floodplain storage lost shall be required for all activities within floodplain of streams located in The Town of Griffith where drainage area of the stream is equal or larger than one square mile. This requirement shall be considered to be above and beyond the minimum requirements provided in the applicable flood hazard areas ordinance currently in effect in The Town of Griffith. The Town may alter the compensation ratio, based on extenuating circumstances, for a specific project.

Note that by definition, compensatory storage is the replacement of the existing floodplain and, in rare exceptions, the floodway storage lost due to fill. Compensatory storage is required when a portion of the floodplain is filled, occupied by a structure, or when as a result of a project a change in the channel hydraulics occurs that reduces the existing available floodplain storage. The compensatory storage should be located adjacent or opposite the placement of the fill and maintain an unimpeded connection to an adjoining floodplain area.

Computations must show 1.5 times the provision of compensatory floodplain storage for 10-year, 50-year, and 100-year storm events. That is, the post-development 10-year floodplain storage along a stream shall be 1.5 times the 10-year pre-development floodplain storage along the stream within the property limits, the post-development 50-year floodplain storage along a stream shall be 1.5 times the 50-year pre-development floodplain storage along the stream within the property limits, and the post-development 100-year floodplain storage along a stream shall be 1.5 times the 100-year pre-development floodplain storage along the stream within the property limits.

Calculations for floodplain volume shall be submitted in tabular form showing calculations by cross-section. The volume of floodplain storage under the without-project conditions and the with-project conditions should be determined using the average-end-area method with plotted cross-sections at a horizontal to vertical ratio of between 5:1 and 10:1, with 10- through 100-year flood elevations noted on each cross section. The scale chosen should be large enough to show the intent of proposed grading. Cross-sections should reflect both the existing and proposed conditions on the same plot. The location and extent of the compensatory storage area as well as the location and orientation of cross-sections should be shown on the grading plan.

3. CALCULATIONS AND DESIGN STANDARDS AND SPECIFICATIONS

The calculation methods as well as the type, sizing, and placement of all stormwater facilities shall meet the design criteria, standards, and specifications outlined in the Town of Griffith Stormwater Technical Standards Manual (See Appendix D). The methods and procedures in the Stormwater Technical Standards Manual are consistent with the policy stated above.

4. STORMWATER DRAINAGE TECHNICAL REPORT

A written stormwater drainage technical report must contain a discussion of the steps taken in the design of the stormwater drainage system. Note that in order to gain an understanding of and to evaluate the relationship between the proposed improvements for a specific project section/phase and the proposed improvements for an overall multi-section (phased) project, the detailed information requested herein for the first section/phase being permitted must be accompanied by an overall project plan that includes the location, dimensions, and supporting analyses of all detention/retention facilities, primary conveyance facilities, and outlet conditions. The technical report needs to include the following detailed items:

i. A summary report, including the following information:

a. Description of the nature and purpose of the project.
b. The significant drainage problems associated with the project.
c. The analysis procedure used to evaluate these problems and to propose solutions.
d. Any assumptions or special conditions associated with the use of these procedures, especially the hydrologic or hydraulic methods.
e. The proposed design of the drainage control system.
f. The results of the analysis of the proposed drainage control system showing that it does solve the project's drainage problems. Any hydrologic or hydraulic calculations or modeling results must be adequately cited and described in the summary description. If hydrologic or hydraulic models are used, the input and output files for all necessary runs must be included in the appendices. A map showing any drainage area subdivisions used in the analysis must accompany the report.
g. Soil properties, characteristics, limitations, and hazards associated with the project site and the measures that will be integrated into the project to overcome or minimize adverse soil conditions.
h. Identification of any other State or Federal water quality permits that are required for construction activities associated with the owner's project site.

ii. A Hydrologic/Hydraulic Analysis, consistent with the methodologies and calculation included in the Town of Griffith Stormwater Technical Standards Manual, and including the following information:

a. A hydraulic report detailing existing and proposed drainage patterns on the subject site. The report should include a description of present land use and proposed land use. Any off-site drainage entering the site or any downstream restrictions should be addressed as well. This report should be comprehensive and detail all of the steps the engineer took during the design process.
b. All hydrologic and hydraulic computations should be included in the submittal. These calculations should include, but are not limited to the following: runoff curve numbers and runoff coefficients, runoff calculations, stage-discharge relationships, times-of-concentration and storage volumes.
c. Copies of all computer runs. These computer runs should include both the input and the outputs. Electronic copies of the computer runs with input files must also be included.
d. A set of exhibits should be included showing the drainage sub-areas and a schematic detailing of how the computer models were set up.
e. A conclusion which summarizes the hydraulic design and details how this design satisfies this Ordinance.
f. Signed and Certified (stamped) by a Professional Engineer registered in the State of Indiana.

5. DRAINAGE EASEMENT REQUIREMENTS

There shall be no trees or shrubs planted, nor any structures or fences erected, in any drainage easement, unless otherwise accepted by the Town Engineer in writing. The following specific areas shall be included in a petition:

A. Subdivisions

i. All new channels, drain tiles equal to or greater than 12 inches in diameter, inlet and outlet structures of detention and retention ponds, and appurtenances thereto as required by this Chapter, that are installed in subdivisions requiring a stormwater management permit from the Town of Griffith shall be contained within a minimum 30 feet of drainage easement. New drain tiles refer to all sub-surface stormwater piping, tubing, tiles, manholes, inlets, catch basins, risers, etc.

ii. New drain tile, 12 inches or larger in diameter shall be placed in a 30-foot easement (15 feet from centerline on each side) and shall be designated on the record plat as 30-foot Drainage Easement. Wider easements may be required by the Town when the depth of pipe is greater than 6 to 10 feet, depending on the pipe size.

iii. A minimum of 25 feet from top of the bank on each side of a new channel shall be designated on the record plat as a Drainage Easement.

iv. Rear-yard swales and emergency overflow paths associated with detention ponds shall be contained within a minimum of 30 feet width (15 feet from centerline on each side) of drainage easement.

v. A minimum of 30 feet beyond the actual footprint (top of the bank) of stormwater detention facilities shall be designated as drainage easement. A minimum 30-foot width easement shall also be required as access easement from a public right-of-way to the facility, unless the pond is immediately next to a public right-of-way.

vi. The statutory 75-foot (each side) drainage easement for regulated drains already within the Lake County Regulated Drainage system may be reduced if the drain is re-classified by the County Surveyor as an Urban Drain.

vii. Any crossing and/or encroachment of a Regulated Drainage Easement requires application and acceptance from the Lake County Surveyor's office.

B. Non-Subdivisions

Where the Town of Griffith is responsible for maintenance of the drainage system, regulated drainage easements of 75 feet from the top of bank on each side of the channel or each side of the tile centerline must be dedicated to The Town of Griffith.

C. Municipalities and Schools

All new channels, swales, drain tiles, inlet and outlet structures of detention and retention ponds, and appurtenances thereto as required by this chapter, that are installed on the municipal or school property shall be constructed, maintained and repaired by the entity at their expense. The design must meet the standards of the Town of Griffith Stormwater Management Ordinance for sizing and installation. Any off-site portion of the drainage system must be within easements and have clearly defined maintenance agreements.

6. PLACEMENT OF UTILITIES

No utility company may disturb existing storm management facilities without the consent of the Town of Griffith, whose decision may be appealed to the Town. All existing drainage facilities shall have senior rights and damage to said facilities shall result in penalties as prescribed in Chapter 8 of this ordinance.

7. STRUCTURES NEAR COUNTY REGULATED DRAINS

For regulated drains not located in platted subdivisions, no permanent structure (including fences) shall be constructed within seventy-five feet measured at right angles from a) the existing top edge of each bank of a regulated open drain; or b) the center line of a tiled Regulated Drain, unless otherwise accepted by the Lake County Drainage Board. The Indiana Drainage Code shall be consulted and incorporated by reference.

8. INSPECTION, MAINTENANCE, RECORD KEEPING, AND REPORTING

After the approval of the stormwater management permit by the Town of Griffith, and the commencement of construction activities, the Town of Griffith has the authority to conduct inspections of the work being done to insure full compliance with the provisions of this chapter, the Stormwater Technical Standards Manual, and the terms and conditions of the approved permit.

The Town of Griffith also has the authority to perform long-term, post-construction inspection of all public or privately owned stormwater quantity facilities. The inspection will cover physical conditions, available storage capacity, and the operational condition of key facility elements. Stormwater quantity facilities shall be maintained in good condition, in accordance with the terms and conditions of the approved stormwater management permit, and shall not be subsequently altered, revised or replaced except in accordance with the approved stormwater permit, or in accordance with approved amendments or revisions to the permit. If deficiencies are found during the inspection, the owner of the facility will be notified by the Town of Griffith and will be required to take all necessary measures to correct such deficiencies. If the owner fails to correct the deficiencies within the allowed time period, as specified in the notification letter, the Town of Griffith will undertake the work and collect from the owner using lien rights if necessary.

Assignment of responsibility for maintaining facilities serving more than one lot or holding shall be documented by appropriate covenants to property deeds, unless responsibility is formally accepted by a public body, and determined before the final stormwater permit is approved.

CHAPTER FOUR

STORMWATER POLLUTION PREVENTION FOR CONSTRUCTION SITES

1. APPLICABILITY AND EXEMPTIONS

The Town Engineer will require a Stormwater Pollution Prevention Plan (SWPPP), which includes erosion and sediment control measures and materials handling procedures, to be submitted as part of the construction plans and specifications. Any project located within The Town of Griffith that includes clearing, grading, excavation, and other land disturbing activities, resulting in the disturbance of or impact on one (1) acre or more of total land area, is subject to the requirements of this chapter. This includes both new development and re-development.

2. EROSION AND SEDIMENT CONTROL ORDINANCE

The Town of Griffith – Erosion and Sediment Control Ordinance No. 2008-01 was passed and adopted on January 15, 2008. A copy of this Ordinance is included in Appendix C along with a copy of IDEM's Rule 5. This Ordinance includes information on Construction Plan Requirements, Storm Water Quality Control Requirements, Site Development Permit, Inspection, Enforcement, etc. The information contained in this chapter should be considered as supplementing the previously passed Ordinance No. 2008-01. In case of conflicting requirements, the most restrictive shall apply.

Note:
For any project meeting the criteria in Paragraph 1. above, the project site owner shall submit an application for a Site Development/Stormwater Management Permit to the Town of Griffith. A copy of the permit application form and checklist can be found in Appendix C. The permit approval process is shown in Figure 1.

3. POLICY ON STORMWATER POLLUTION PREVENTION

Effective stormwater pollution prevention on construction sites is dependent on a combination of preventing movement of soil from its original position (erosion control), intercepting displaced soil prior to entering a waterbody (sediment control), and proper on-site materials handling. As discussed in the Erosion and Sediment Control Ordinance cited above, the developer must submit to the Town of Griffith, a SWPPP with detailed erosion and sediment control plans as well as a narrative describing materials type and specification, handling and storage, and construction sequencing. The following principles apply to all land-disturbing activities and should be considered in the preparation of a SWPPP within The Town of Griffith.

A. Minimize the potential for soil erosion by designing a development that fits the topography and soils of the site. Deep cuts and fills in areas with steep slopes should be avoided wherever possible, and natural contours should be followed as closely as possible.

B. Existing natural vegetation should be retained and protected wherever possible. Areas immediately adjacent (within 35 feet of top of bank) to watercourses and lakes also should be left undisturbed wherever possible. Unvegetated or vegetated areas with less than 70% cover that are scheduled or likely to be left inactive for 15 days or more must be temporarily or permanently stabilized with measures appropriate for the season to reduce erosion potential. Alternative measures to site stabilization may be acceptable if the project site owner or their representative can demonstrate they have implemented and maintained erosion and sediment control measures adequate to prevent sediment discharge from the inactive area.

Figure 1: Permit Approval Process

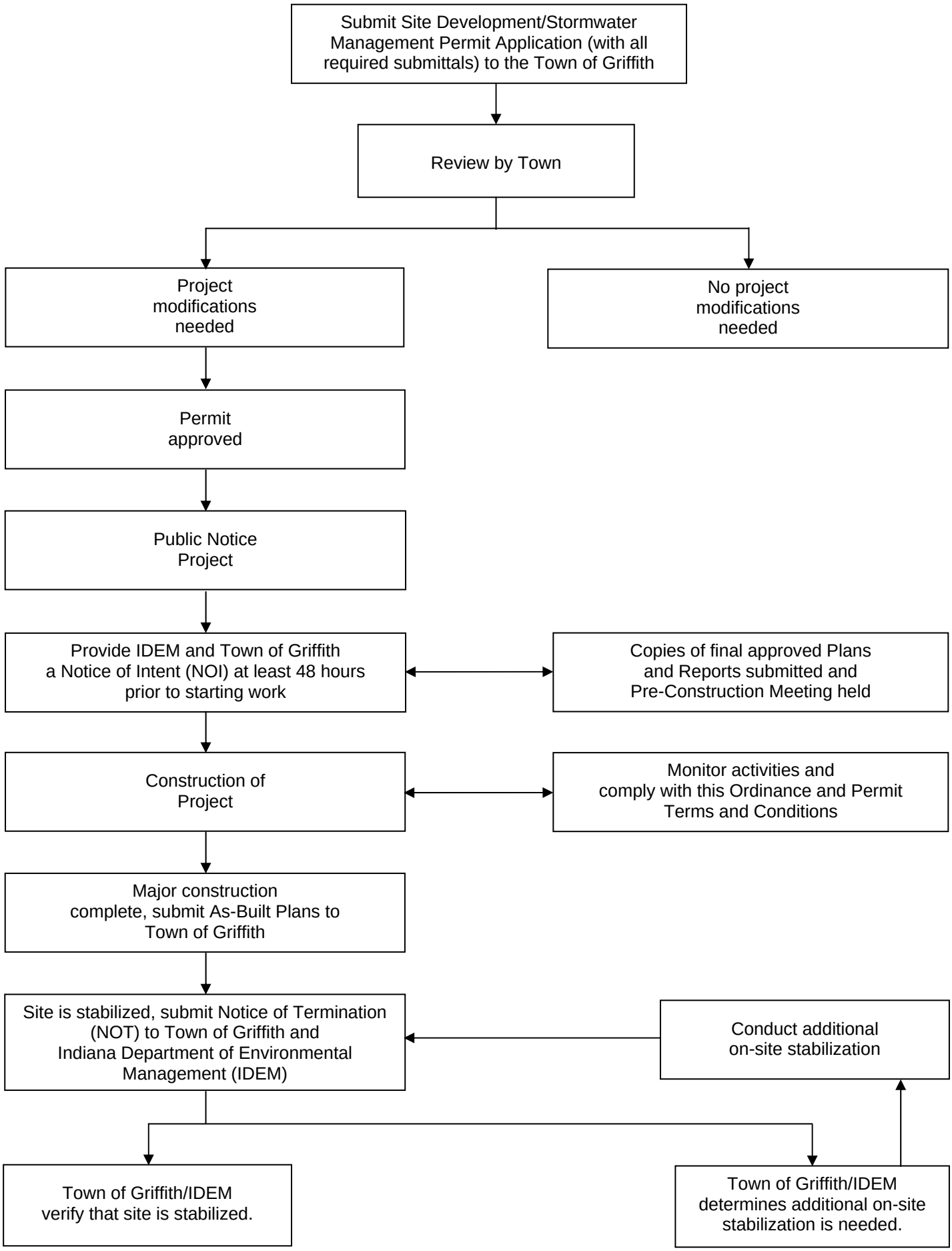

C. All activities on a site should be conducted in a logical sequence so that the smallest practical area of land will be exposed for the shortest practical period of time during development.

D. The length and steepness of designed slopes should be minimized to reduce erosion potential. Drainage channels and swales must be designed and adequately protected so that their final gradients and resultant velocities will not cause erosion in the receiving channel or at the outlet. Methods for determining acceptable velocities are included Stormwater Technical Standards Manual.

E. Sediment-laden water which otherwise would flow from the project site shall be treated by erosion and sediment control measures appropriate to minimize sedimentation. A stable and erosion resistant construction site access point (i.e., crushed stone, slag, aggregate, etc.) shall be provided at all points of construction traffic ingress and egress to the project site.

F. Appropriate measures shall be implemented to prevent wastes or unused building materials, including, garbage, debris, packaging material, fuels and petroleum products, hazardous materials or wastes, cleaning wastes, wastewater, concrete truck washout, and other substances from being carried from a project site by runoff or wind. Identification of areas where concrete truck washout is permissible must be clearly posted at appropriate areas of the site. Wastes and unused building materials shall be managed and disposed of in accordance with all applicable State statutes and regulations. Proper storage and handling of materials such as fuels or hazardous wastes, and spill prevention and cleanup measures shall be implemented to minimize the potential for pollutants to contaminate surface or ground water or degrade soil quality.

G. Public or private roadways shall be kept cleared of accumulated sediment that is a result of runoff or tracking. Bulk clearing of accumulated sediment shall not include flushing the area with water. Cleared sediment shall be redistributed or disposed of in a manner that is in accordance with all applicable statutes and regulations.

H. Collected runoff leaving a project site must be either discharged directly into a well-defined, stable receiving channel, or diffused and released to adjacent property without causing an erosion or pollutant problem to the adjacent property owner.

I. Natural features, including wetlands, shall be protected from pollutants associated with stormwater runoff.

4. CALCULATIONS AND DESIGN STANDARDS AND SPECIFICATIONS

In calculating the total area of land disturbance, for the purposes of determining applicability of this chapter to the project, the following guidelines should be used:

A. Off-site construction activities that provide services (for example, road extensions, sewer, water, and other utilities) to a land disturbing project site, must be considered as a part of the total land disturbance calculation for the project site, when the activity is under the control of the project site owner.

B. Strip developments will be considered as one (1) project site and must comply with this chapter unless the total combined disturbance on all individual lots is less than one (1) acre and is not part of a larger common plan of development or sale.

C. To determine if multi-lot project sites are regulated by this rule, the area of land disturbance shall be calculated by adding the total area of land disturbance for improvements, such as, roads, utilities, or common areas, and the expected total disturbance on each individual lot, as determined by the following:

i. For a single-family residential project site where the lots are one-half (0.5) acre or more, one-half (0.5) acre of land disturbance must be used as the expected lot disturbance.
ii. For a single-family residential project site where the lots are less than one half (0.5) acre in size, the total lot must be calculated as being disturbed.
iii. To calculate lot disturbance on all other types of projects sites, such as industrial and commercial projects sites, a minimum of one (1) acre of land disturbance must be used as the expected lot disturbance, unless the lots are less than one (1) acre in size, in which case the total lot must be calculated as being disturbed.

The calculation methods as well as the type, sizing, and placement of all stormwater pollution prevention measures for construction sites shall meet the design criteria, standards, and specifications outlined in the "Indiana Stormwater Quality Manual" or the Town of Griffith Stormwater Technical Standards Manual (See Appendix D). The methods and procedures included in these two references are in keeping with the above stated policy and meet the requirements of IDEM's Rule 5.

CHAPTER FIVE

STORMWATER QUALITY MANAGEMENT FOR POST-CONSTRUCTION

1. APPLICABILITY AND EXEMPTIONS

In addition to the requirements of Chapter 4, the stormwater pollution prevention plan, which is to be submitted to the Town of Griffith as part of the stormwater management permit application, must also include post-construction stormwater quality measures. These measures are incorporated as a permanent feature into the site plan and are left in place following completion of construction activities to continuously treat stormwater runoff from the stabilized site. Any project located within The Town of Griffith that includes clearing, grading, excavation, and other land disturbing activities, resulting in the disturbance of or impact on 1 acre or more of total land area, is subject to the requirements of this chapter. This includes both new development and re-development, and disturbances of less than one (1) acre of land that are part of a larger common plan of development or sale if the larger common plan will ultimately disturb one (1) or more acres of land, within the MS4 area.

The requirements under this chapter do not apply to the following activities:

A. agricultural land disturbing activities; or
B. construction activities associated with a single family residential dwelling disturbing less than 5 acres, when the dwelling is not part of a larger common plan of development or sale; or
C. single family residential developments consisting of four or less lots; or
D. a single-family residential strip development where the developer offers for sale or lease without land improvements and the project is not part of a larger common plan of development or sale; or
E. individual building lots within a larger permitted project.

The requirements under this chapter do not apply to the following activities, provided other applicable State permits contain provisions requiring immediate implementation of soil erosion control measures:

A. Landfills that have been issued a certification of closure under 329 IAC 10.

It will be the responsibility of the project site owner to complete a Site Development/Stormwater Management Permit application and ensure that a sufficient construction plan is completed and submitted to the Town of Griffith in accordance with Chapter 4 and Appendix C of this Ordinance. It will be the responsibility of the project site owner and/or permit holder to ensure proper construction and installation of all stormwater BMPs in compliance with this Ordinance and with the approved stormwater management permit, and to notify the Town with a sufficient Notice of Termination letter upon completion of the project and stabilization of the site. However, all eventual property owners of stormwater quality management facilities meeting the applicability requirements must comply with the requirements of this chapter and this Ordinance.

2. POLICY ON STORMWATER QUALITY MANAGEMENT

It is recognized that developed areas, as compared to undeveloped areas, generally have increased imperviousness, decreased infiltration rates, increased runoff rates, and increased concentrations of pollutants such as fertilizers, herbicides, greases, oil, salts and other pollutants. As new development and re-development continues in The Town of Griffith, measures must be taken to intercept and filter pollutants from stormwater runoff prior to reaching regional creeks, streams, and rivers. Through the use of Best Management Practices (BMP), stormwater runoff will be filtered and harmful amounts of sediment,

nutrients, and contaminants will be removed. The Town of Griffith has established a minimum standard that the measurement of the effectiveness of the control of Stormwater quality will be based on the management of Total Suspended Solids (TSS).

The project site owner must submit to the Town Engineer, a Storm Water Pollution Prevention Plan (SWPPP) that would show placement of appropriate BMP(s) from a pre-approved list of BMPs specified in the Town of Griffith Stormwater Technical Standards Manual. The noted BMPs must be designed, constructed, and maintained according to guidelines provided or referenced in the Town of Griffith Stormwater Technical Standards Manual. Practices other than those specified in the pre-approved list may be utilized. However, the burden of proof, as to whether the performance (minimum 80% TSS removal) and ease of maintenance of such practices will be according to guidelines provided in the Town of Griffith Stormwater Technical Standards Manual, would be placed with the applicant. Details regarding the procedures and criteria for consideration of acceptance of such BMPs are provided in the Town of Griffith Stormwater Technical Standards Manual.

Gasoline outlets and refueling areas must install appropriate practices to reduce lead, copper, zinc, and hydrocarbons in stormwater runoff. These requirements will apply to all new and existing facilities.

3. CALCULATIONS AND DESIGN STANDARDS AND SPECIFICATIONS

Calculation of land disturbance should follow the guidelines discussed in Chapter 4, Section 4.

The calculation methods as well as the type, sizing, and placement of all stormwater quality management measures, or BMPs shall meet the design criteria, standards, and specifications outlined in the *Indiana Stormwater Quality Manual* that is incorporated by reference herein or the Town of Griffith Stormwater Technical Standards Manual (Appendix D). The methods and procedures included in these two references are in keeping with the above stated policy and meet the requirements of IDEM's Rule 13. In case of conflicting requirements, the most restrictive shall apply.

4. EASEMENT REQUIREMENTS

All stormwater quality management systems, including detention or retention basins, filter strips, pocket wetlands, in-line filters, infiltration systems, conveyance systems, structures and appurtenances located outside of the right-of-way shall be incorporated into permanent easements. For the purposes of monitoring, inspection, and general maintenance activities, a 30-foot wide perimeter beyond the actual footprint of the stormwater quality management facility as well as a 30-foot wide access easement from a public right-of-way to each BMP shall be provided.

5. INSPECTION, MAINTENANCE, RECORD KEEPING, AND REPORTING

After the approval of the stormwater management permit by the Town of Griffith and the commencement of construction activities, the Town has the authority to conduct inspections of the work being done to ensure full compliance with the provisions of this chapter, the Stormwater Technical Standards Manual, and the terms and conditions of the approved permit.

Stormwater quality management facilities shall be maintained in good condition, in accordance with the Operation and Maintenance procedures and schedules listed in the *Indiana Stormwater Quality Manual* or the Town of Griffith Stormwater Technical Standards Manual (See Appendix D), and the terms and conditions of the approved stormwater permit, and shall not be subsequently altered, revised, or replaced except in accordance with the approved stormwater permit, or in accordance with approved amendments or revisions in the permit. Following construction completion, maintenance of stormwater quality facilities shall be the long-term responsibility of the facility's owner.

The Town of Griffith has the authority to perform long-term, post-construction inspection of all public or privately owned stormwater quality facilities. The inspections will follow the Operation and Maintenance procedures included in the Stormwater Technical Standards Manual and/or permit application for each specific BMP. The inspection will cover physical conditions, available water quality storage capacity and the operational condition of key facility elements. Noted deficiencies and recommended corrective action will be included in an inspection report. If deficiencies are found during the inspection, the owner of the facility will be notified by the Town of Griffith and will be required to take all necessary measures to correct such deficiencies. If the owner fails to correct the deficiencies within the allowed time period, as specified in the notification letter, the Town of Griffith will undertake the work and collect from the owner using lien rights if necessary.

CHAPTER SIX

DEVELOPMENT IN WETLANDS REGULATIONS

1. APPLICABILITY AND EXEMPTIONS

This chapter shall apply to all land-disturbing activities regulated by this Ordinance. No building permit shall be issued and no land disturbance started for any construction in a development, as defined in Appendix A, identified as containing wetlands until the owner thereof has obtained all required state and federal permits or releases related to the dredging or filling of wetlands. As a pre-condition to receiving a building or land disturbance permit for a development identified as containing wetlands where the applicant for the permit does not intend to fill a wetland, such unaffected wetland must be identified in one of the methods enumerated in Section 3 of this Chapter, shown on the proposed development plans, and submitted to the Town Engineer along with plans to protect and avoid any disturbance to such unaffected wetland.

The requirements under this chapter do not apply to the following:

A. Artificially-constructed ponds, drainage ditches, stormwater retention/detention basins, gravel pits, stone quarries, and treatment lagoons that exist at the site and that may appear to display wetland-like properties. However, the applicant would need to independently contact IDEM or the U.S. Army Corps of Engineers for appropriate Federal and State requirements;;
B. Wetlands or portions thereof for which federal or state permits for fill were issued prior to the enactment of this Chapter; or to
C. Any area or use excluded from local planning and zoning jurisdiction by federal or state law.

It will be the responsibility of the project site owner to complete a stormwater permit application and ensure that all wetlands identified to be present at the project site are sufficiently protected and preserved as set forth in this Chapter.

2. POLICY ON WETLANDS DISTURBANCE PREVENTION

It is the public policy of The Town of Griffith to preserve, protect, and conserve freshwater wetlands, and the benefits derived wherefrom, to prevent the despoliation and destruction of freshwater wetlands, and to regulate use and development of such wetlands to secure the natural benefits of freshwater wetlands, consistent with the general welfare and beneficial to economic, social, and agricultural development of The Town of Griffith.

3. WETLANDS IDENTIFICATION

In implementing the terms of this Chapter, any of the following materials shall be prima facia evidence which may be relied upon by the Town of Griffith for the identification, delineation, and existence of a wetland:

A. National Wetlands Inventory (NWI) maps produced or maintained by the United States Fish and Wildlife Service (USFWS).
B. Maps produced, or maintained and utilized, by the United States Corps of Engineers for identification and/or delineation of wetlands.
C. Maps produced, or maintained and utilized, by the United States Natural Resources Conservation Service (NRCS) for the identification and/or delineation of wetlands.
D. USDA – NRCS Soil Survey of The Town of Griffith hydric soils list.

E. Field investigations performed by the United States Army Corps of Engineers or private consultants recognized by the Corps as authorities in wetland identification and delineation.

NOTE:

NWI maps are intended to identify *potential* wetlands. Due to the lack of field verification, NWI classified wetlands are sometimes erroneously identified, missed, or misidentified. Additionally, the criteria used in identifying these wetlands, as established by USFWS, are different from those currently used by the U.S. Army Corps of Engineers. NWI maps may serve as an indicator of potential jurisdictional wetlands.

Likewise, soil survey maps were developed from actual field investigations by soil scientists from the NRCS but they address only one of the three required wetland criteria and may reflect historical conditions rather than current site conditions.

It is recommended that all sites be field reviewed by a qualified person with experience in wetland identification in order to determine the presence or absence of wetlands.

CHAPTER SEVEN

AS-BUILT PLANS & MAINTENANCE BOND

1. CERTIFICATION OF AS-BUILT PLANS

After completion of construction of the project and before final project acceptance of the stormwater management plan a professionally prepared and certified 'as-built' set of plans by a Professional Engineer or licensed Land Surveyor registered in the State of Indiana shall be submitted to the Town of Griffith for review. Additionally, a digital copy of the 'as-built' plans is required in a format accepted by the Town. These plans shall include all pertinent data relevant to the completed storm drainage system and stormwater management facilities, and shall include:

A. Pipe size and pipe material

B. Invert elevations

C. Top rim elevations

D. Pipe structure lengths

E. BMP types, dimensions, and boundaries/easements

F. "As-planted" plans for BMPs, as applicable

G. Data and calculations showing detention basin storage volume

H. Data and calculations showing BMP treatment capacity

I. Certified statement on plans stating the completed storm drainage system and stormwater management facilities substantially comply with construction plans and the Site Development/Stormwater Management Permit as approved by the Town Engineer. (See certificate in Stormwater Technical Standards Manual.)

2. MAINTENANCE BOND

The property owner, developer, or contractor shall be required to file a two-year maintenance bond or other acceptable guarantee with the Town of Griffith, prior to final project acceptance, in an amount not less than twenty five percent (25%) of the cost of the stormwater drainage system, and in a form satisfactory to the Town of Griffith attorney in order to assure that such stormwater system installation was done according to standards of good workmanship, that the materials used in the construction and installation were of good quality and construction, and that such project was done in accordance with the accepted plans, and this Ordinance. The bond or other acceptable guarantee shall be in effect for a period of two years after the date of the final project acceptance by the Town of Griffith.

To verify that all enclosed drains are functioning properly, visual recordings (via closed circuit television) of such tile drains shall be required, once following the completion of installation (including the installation of all utility mains) and the second time before release of maintenance bonds. These visual recordings will be scheduled and paid for by the developer. The recordings shall be completed and provided to the Town of Griffith within 7 days following the completion of installation and again at least 60 days prior to the expiration date of the maintenance bond. Reports summarizing the results of the noted visual recordings shall be reviewed and accepted by the Town of Griffith before the plat is recommended for recording and again before the maintenance bond would be recommended to be released.

CHAPTER EIGHT

ENFORCEMENT

1. COMPLIANCE WITH THIS ORDINANCE

In addition to the requirements of this Ordinance, compliance with the requirements set forth in the local Zoning Ordinances is also necessary. Compliance with all applicable ordinances of The Town of Griffith as well as with applicable State of Indiana statues and regulations shall also be required. Unless otherwise stated, all other specifications referred to in this Ordinance shall be the most recent edition available. Violations of the requirements of this Ordinance are subject to the penalties listed below unless covered under a previously passed Ordinance.

2. PENALTIES FOR VIOLATIONS

Any party and/or person(s) found in violation of any provision of this Ordinance shall be responsible for a civil infraction and subject to a maximum fine of $2,500 per violation. Each day such violation occurs or continues shall be deemed a separate offense and shall make the violator liable for the imposition of a fine for each day. The rights and remedies provided for in this section are cumulative and in addition to any other remedies provided by law. An admission or determination of responsibility shall not exempt the offender from compliance with the requirements of this Ordinance.

Any party and/or person(s) who aids or abets any party and/or person(s) in a violation of this Ordinance shall be subject to the penalties provided in this section.

3. STOP WORK ORDER

In addition to the penalties listed above, if land disturbance or impact activities are conducted contrary to the provisions of this Ordinance or accepted final stormwater management plans, the Town of Griffith may order the work stopped by notice in writing served on any person engaged in the doing or causing of such work to be done, and any such persons shall forthwith stop such work until authorized by the Town of Griffith to proceed with the work. The Town may also undertake or cause to be undertaken, any necessary or advisable protective measures to prevent violations of this Ordinance or to avoid or reduce the effects of noncompliance herewith. The cost of any such protective measures shall be the responsibility of the owner of the property upon which the work is being done and the responsibility of any person carrying out or participating in the work.

Any person who neglects or fails to comply with a stop work order shall be subject to a maximum fine of $2,500 per violation. Each day such violation occurs or continues shall be deemed a separate offense and shall make the violator liable for the imposition of a fine for each day.

4. FAILURE TO COMPLY OR COMPLETE

In addition to any other remedies, should any owner fail to comply with the provisions of this ordinance, the Town of Griffith may, after giving notice and opportunity for compliance, have the necessary work done, and the owner shall be required to promptly reimburse the Town for all costs of such work.

5. SUSPENSION OF ACCESS TO THE STORM DRAIN SYSTEM

A. Suspension due to Emergency Situations

The Town of Griffith may, without prior notice, suspend stormwater drainage system discharge access to a person when such suspension is necessary to stop an actual or threatened discharge which presents or may present imminent and substantial danger to the environment, or to the health or welfare of persons, or to the stormwater drainage system or Waters of the United States. If the violator fails to comply with a suspension order issued in an emergency, Town of Griffith may take such steps as deemed necessary to prevent or minimize damage to the stormwater drainage system or Waters of the United States, or to minimize danger to persons.

B. Suspension due to the Detection of Illicit Discharge

Any person discharging to the stormwater drainage system in violation of this Ordinance may have their stormwater drainage system access terminated if such termination would abate or reduce an illicit discharge. The Town of Griffith will notify a violator of the proposed termination of its MS4 access. The violator may petition the Town for a reconsideration and hearing.

6. CORRECTIVE ACTION

Nothing herein contained shall prevent the Town of Griffith from taking such other lawful action as may be necessary to prevent or remedy any violation. All costs connected therewith shall accrue to the person or persons responsible. Costs include, but are not limited to, repairs to the stormwater drainage system made necessary by the violation, as well as penalties levied by the EPA or IDEM, attorney fees, and other costs and expenses.

7. APPEALS

Any person to whom any provision of this Ordinance has been applied may appeal in writing, not later than 30 days after the action or decision being appealed from, to the Town of Griffith the action or decision whereby any such provision was so applied. Such appeal shall identify the matter being appealed, and the basis for the appeal. The Town of Griffith shall consider the appeal and make a decision whereby it affirms, rejects or modifies the action being appealed. In considering any such appeal, the Town may consider the recommendations of persons having knowledge of the matter. In considering any such appeal, the Town of Griffith may grant a variance from the terms of this Ordinance to provide relief, in whole or in part, from the action being appealed, but only upon finding that the following requirements are satisfied:

A. The application of the Ordinance provisions being appealed will present or cause practical difficulties for a development or development site; provided, however, that practical difficulties shall not include the need for the developer to incur additional reasonable expenses in order to comply with the Ordinance; and

B. The granting of the relief requested will not substantially prevent the goals and purposes of this Ordinance, nor result in less effective management of stormwater runoff.

APPENDIX A

ABBREVIATIONS AND DEFINITIONS

APPENDIX A

ABBREVIATIONS AND DEFINITIONS

ABBREVIATIONS

BMP	Best Management Practice
COE	United States Army Corps of Engineers
CWA	Clean Water Act
EPA	Environmental Protection Agency
GIS	Geographical Information System
IDEM	Indiana Department of Environmental Management
MS4	Municipal Separate Storm Sewer System
NRCS	USDA-Natural Resources Conservation Service
NPDES	National Pollution Discharge Elimination System
NWI	National Wetlands Inventory
POTW	Publicly Owned Treatment Works
SWCD	Soil and Water Conservation District
SWPPP	Stormwater Pollution Prevention Plan
USDA	United States Department of Agriculture
USFWS	United States Fish and Wildlife Service

DEFINITIONS

Agricultural land disturbing activity. Tillage, planting, cultivation, or harvesting operations for the production of agricultural or nursery vegetative crops. The term also includes pasture renovation and establishment, the construction of agricultural conservation practices, and the installation and maintenance of agricultural drainage tile. For purposes of this rule, the term does not include land disturbing activities for the construction of agricultural related facilities, such as barns, buildings to house livestock, roads associated with infrastructure, agricultural waste lagoons and facilities, lakes and ponds, wetlands; and other infrastructure.

Base Flow. Stream discharge derived from groundwater sources as differentiated from surface runoff. Sometimes considered to include flows from regulated lakes or reservoirs.

Best Management Practices. Design, construction, and maintenance practices and criteria for stormwater facilities that minimize the impact of stormwater runoff rates and volumes, prevent erosion, and capture pollutants.

Buffer Strip. An existing, variable width strip of vegetated land intended to protect water quality and habitat.

Capacity (of a Storm Drainage Facility). The maximum flow that can be conveyed or stored by a storm drainage facility without causing damage to public or private property.

Catch Basin. A chamber usually built at the curb line of a street for the admission of surface water to a storm drain or subdrain, having at its base a sediment sump designed to retain grit and detritus below the point of overflow.

Channel. A portion of a natural or artificial watercourse which periodically or continuously contains moving water, or which forms a connecting link between two bodies of water. It has a defined bed and banks which serve to confine the water.

Comprehensive Stormwater Management. A comprehensive stormwater program for effective management of stormwater quantity and quality throughout the community.

Constructed Wetland. A manmade shallow pool that creates growing conditions suitable for wetland vegetation and is designed to maximize pollutant removal.

Construction activity. Land disturbing activities, and land disturbing activities associated with the construction of infrastructure and structures. This term does not include routine ditch or road maintenance or minor landscaping projects.

Construction site access. A stabilized stone surface at all points of ingress or egress to a project site, for the purpose of capturing and detaining sediment carried by tires of vehicles or other equipment entering or exiting the project site.

Contiguous. Adjoining or in actual contact with.

Contour. An imaginary line on the surface of the earth connecting points of the same elevation.

Contour Line. Line on a map which represents a contour or points of equal elevation.

Contractor or subcontractor. An individual or company hired by the project site or individual lot owner, their agent, or the individual lot operator to perform services on the project site.

Conveyance. Any structural method for transferring stormwater between at least two points. The term includes piping, ditches, swales, curbs, gutters, catch basins, channels, storm drains, and roadways.

Cross Section. A graph or plot of ground elevation across a stream valley or a portion of it, usually along a line perpendicular to the stream or direction of flow.

Culvert. A closed conduit used for the conveyance of surface drainage water under a roadway, railroad, canal or other impediment.

Dechlorinated swimming pool discharge. Chlorinated water that has either sat idle for seven (7) days following chlorination prior to discharge to the MS4 conveyance, or, by analysis, does not contain detectable concentrations (less than five-hundredths (0.05) milligram per liter) of chlorinated residual.

Design Storm. A selected storm event, described in terms of the probability of occurring once within a given number of years, for which drainage or flood control improvements are designed and built.

Detention. Managing stormwater runoff by temporary holding and controlled release.

Detention Basin. A facility constructed or modified to restrict the flow of storm water to a prescribed maximum rate, and to detain concurrently the excess waters that accumulate behind the outlet.

Detention Storage. The temporary detaining of storage of stormwater in storage facilities, on rooftops, in streets, parking lots, school yards, parks, open spaces or other areas under predetermined and controlled conditions, with the rate of release regulated by appropriately installed devices.

Detention Time. The theoretical time required to displace the contents of a tank or unit at a given rate of discharge (volume divided by rate of discharge).

Detritus. Dead or decaying organic matter; generally contributed to stormwater as fallen leaves and sticks or as dead aquatic organisms.

Developer. Any person financially responsible for construction activity, or an owner of property who sells or leases, or offers for sale or lease, any lots in a subdivision.

Development. Any man-made change to improved or unimproved real estate including but not limited to:

1. Construction, reconstruction, or placement of a building or any addition to a building;

2. Installing a manufactured home on a site, preparing a site for a manufactured home, or installing a recreational vehicle on a site;

3. for more than hundred eighty (180) days;

4. Installing utilities, construction of walls, construction of roads, or similar projects;

5. Construction of flood control structures such as levees, dikes, dams, or channel improvements;

6. Mining, dredging, filling, grading, excavation, or drilling operations;

7. Construction or reconstruction of bridges or culverts;

8. Storage of materials; or

9. Any other activity that might change the direction, height, or velocity of flood or surface waters.

"Development" does not include activities such as the maintenance of existing buildings and facilities such as painting, re-roofing, resurfacing roads, or gardening, plowing and similar agricultural practices that do not involve filling, grading, excavation, or the construction of permanent buildings.

Discharge. Usually the rate of water flow. A volume of fluid passing a point per unit time commonly expressed as cubic feet per second, cubic meters per second, gallons per minute, or millions of gallons per day.

Disposal. The discharge, deposit, injection, spilling, leaking, or placing of any solid waste or hazardous waste into or on any land or water so that the solid waste or hazardous waste, or any constituent of the waste, may enter the environment, be emitted into the air, or be discharged into any waters, including ground waters.

Ditch. A man-made, open watercourse in or into which excess surface water or groundwater drained from land, stormwater runoff, or floodwaters flow either continuously or intermittently.

Drain. A buried slotted or perforated pipe or other conduit (subsurface drain) or a ditch (open drain) for carrying off surplus groundwater or surface water.

Drainage. The removal of excess surface water or groundwater from land by means of ditches or subsurface drains. Also see Natural drainage.

Drainage Area. The area draining into a stream at a given point. It may be of different sizes for surface runoff, subsurface flow and base flow, but generally the surface runoff area is considered as the drainage area.

Dry Well. A type of infiltration practice that allows stormwater runoff to flow directly into the ground via a bored or otherwise excavated opening in the ground surface.

Duration. The time period of a rainfall event.

Environment. The sum total of all the external conditions that may act upon a living organism or community to influence its development or existence.

Erodibility Index (EI). The soil erodibility index (EI) provides a numerical expression of the potential for a soil to erode considering the physical and chemical properties of the soil and the climatic conditions where it is located. The higher the index, the greater the investment needed to maintain the sustainability of the soil resource base if intensively cropped. It is defined to be the maximum of (RxKxLS)/T (from the Universal Soil Loss Equation) and (CxI)/T (from the Wind Erosion Equation), where R is a measure of rainfall and runoff, K is a factor of the susceptibility of the soil to water erosion, LS is a measure of the combined effects of slope length and steepness, C is a climatic characterization of windspeed and surface soil moisture and I is a measure of the susceptibility of the soil to wind erosion. Erodibility Index scores equal to or greater than 8 are considered highly erodible land.

Erosion. The wearing away of the land surface by water, wind, ice, gravity, or other geological agents. The following terms are used to describe different types of water erosion:

- *Accelerated erosion*--Erosion much more rapid than normal or geologic erosion, primarily as a result of the activities of man.

- *Channel erosion* --An erosion process whereby the volume and velocity of flow wears away the bed and/or banks of a well-defined channel.

- *Gully erosion* --An erosion process whereby runoff water accumulates in narrow channels and, over relatively short periods, removes the soil to considerable depths, ranging from 1-2 ft. to as much as 75-100 ft.

- *Rill erosion*--An erosion process in which numerous small channels only several inches deep are formed; occurs mainly on recently disturbed and exposed soils (see Rill).

- *Splash erosion*--The spattering of small soil particles caused by the impact of raindrops on wet soils; the loosened and spattered particles may or may not be subsequently removed by surface runoff.

- *Sheet erosion*--The gradual removal of a fairly uniform layer of soil from the land surface by runoff water.

Erosion and sediment control. A practice, or a combination of practices, to minimize sedimentation by first reducing or eliminating erosion at the source and then as necessary, trapping sediment to prevent it from being discharged from or within a project site.

Fill Material. Any material used for primary purpose of replacing a wetland area with dry land or of changing the bottom elevation of a wetland or a waterbody. This definition shall be considered to be automatically amended to conform with the definition of fill material established from time to time by the United States of America or United States Army Corps of Engineers.

Filter Strip. Usually a long, relatively narrow area (usually, 20-75 feet wide) of undisturbed or planted vegetation used near disturbed or impervious surfaces to filter stormwater pollutants for the protection of watercourses, reservoirs, or adjacent properties.

Floatable. Any solid waste that will float on the surface of the water.

Flood (or Flood Waters). A general and temporary condition of partial or complete inundation of normally dry land areas from the overflow, the unusual and rapid accumulation, or the runoff of surface waters from any source.

Floodplain. The channel proper and the areas adjoining the channel which have been or hereafter may be covered by the regulatory or 100-year flood. Any normally dry land area that is susceptible to being inundated by water from any natural source. The floodplain includes both the floodway and the floodway fringe districts.

Floodway. The channel of a river or stream and those portions of the floodplains adjoining the channel which are reasonably required to efficiently carry and discharge the peak flow of the regulatory flood of any river or stream.

Floodway Fringe. That portion of the flood plain lying outside the floodway, which is inundated by the regulatory flood.

Footing Drain. A drain pipe installed around the exterior of a basement wall foundation to relieve water pressure caused by high groundwater elevation.

Garbage. All putrescible animal solid, vegetable solid, and semisolid wastes resulting from the processing, handling, preparation, cooking, serving, or consumption of food or food materials.

Gasoline outlet. An operating gasoline or diesel fueling facility whose primary function is the resale of fuels. The term applies to facilities that create five thousand (5,000) or more square feet of impervious surfaces, or generate an average daily traffic count of one hundred (100) vehicles per one thousand (1,000) square feet of land area.

Geographical Information System. A computer system capable of assembling, storing, manipulation, and displaying geographically referenced information. This technology can be used for resource management and development planning.

Grade. (1) The inclination or slope of a channel, canal, conduit, etc., or natural ground surface usually expressed in terms of the percentage the vertical rise (or fall) bears to the corresponding horizontal distance. (2) The finished surface of a canal bed, roadbed, top of embankment, or bottom of excavation; any surface prepared to a design elevation for the support of construction, such as paving or the laying of a conduit. (3) To finish the surface of a canal bed, roadbed, top of embankment, or bottom of excavation, or other land area to a smooth, even condition.

Grading. The cutting and filling of the land surface to a desired slope or elevation.

Grass. A member of the botanical family Graminae, characterized by blade-like leaves that originate as a sheath wrapped around the stem.

Groundwater. Accumulation of underground water, natural or artificial. The term does not include manmade underground storage or conveyance structures.

Habitat. The environment in which the life needs of a plant or animal are supplied.

Highly Erodible Land (HEL). Land that has an erodibility index of eight or more.

Hydrologic Unit Code. A numeric United States Geologic Survey code that corresponds to a watershed area. Each area also has a text description associated with the numeric code.

Hydrology. The science of the behavior of water in the atmosphere, on the surface of the earth, and underground. A typical hydrologic study is undertaken to compute flow rates associated with specified flood events.

Illicit Discharge. Any discharge to a conveyance that is not composed entirely of stormwater except naturally occurring floatables, such as leaves or tree limbs.

Impaired Waters. Waters that do not or are not expected to meet applicable water quality standards, as included on IDEM's CWA Section 303(d) List of Impaired Waters.

Impervious surface. Surfaces, such as pavement and rooftops, which prevent the infiltration of stormwater into the soil.

Individual building lot. A single parcel of land within a multi-parcel development.

Individual lot operator. A contractor or subcontractor working on an individual lot.

Individual lot owner. A person who has financial control of construction activities for an individual lot.

Infiltration. Passage or movement of water into the soil. Infiltration practices include any structural BMP designed to facilitate the percolation of run-off through the soil to groundwater. Examples include infiltration basins or trenches, dry wells, and porous pavement.

Inlet. An opening into a stormwater drainage system for the entrance of surface storm water runoff, more completely described as a storm drain inlet.

Land-disturbing Activity. Any man-made change of the land surface, including removing vegetative cover that exposes the underlying soil, excavating, filling, transporting and grading.

Land Surveyor. A person licensed under the laws of the State of Indiana to practice land surveying.

Larger common plan of development or sale. A plan, undertaken by a single project site owner or a group of project site owners acting in concert, to offer lots for sale or lease; where such land is contiguous, or is known, designated, purchased or advertised as a common unit or by a common name, such land shall be presumed as being offered for sale or lease as part of a larger common plan. The term also includes phased or other construction activity by a single entity for its own use.

Lowest Adjacent Grade. The elevation of the lowest grade adjacent (abutting) to a structure, where the soil meets the foundation around the outside of the structure (including structural members such as basement walkout, patios, decks, porches, support posts or piers, and rim of the window well).

Lowest Floor. Refers to the lowest of the following:

1. The top of the basement floor;
2. The top of the garage floor, if the garage is the lowest level of the building;
3. The top of the first floor of buildings constructed on a slab or of buildings elevated on pilings or constructed on a crawl space with permanent openings; or

4. The top of the floor level of any enclosure below an elevated building where the walls of the enclosure provide any resistance to the flow of flood waters unless:

   a] The walls are designed to automatically equalize the hydrostatic flood forces on the walls by allowing for the entry and exit of flood waters, by providing a minimum of two opening (in addition to doorways and windows) having a total area of one (1) square foot for every two (2) square feet of enclosed area subject to flooding. The bottom of all such openings shall be no higher than one (1) foot above grade.

   b] Such enclosed space shall be usable only for the parking of vehicles or building access.

Manhole. Storm drain structure through which a person may enter to gain access to an underground storm drain or enclosed structure.

Measurable storm event. A precipitation event that results in a total measured precipitation accumulation equal to, or greater than, one-half (0.5) inch of rainfall.

Mulch. A natural or artificial layer of plant residue or other materials covering the land surface which conserves moisture, holds soil in place, aids in establishing plant cover, and minimizes temperature fluctuations.

Municipal Separate Storm Sewer System. An MS4 meets all the following criteria: (1) is a conveyance or system of conveyances owned by the state, county, city, town, or other public entity; (2) discharges to waters of the U.S.; (3) is designed or used for collecting or conveying stormwater; (4) is not a combined sewer; and, (5) is not part of a Publicly Owned Treatment Works (POTW).

Refueling area. An operating gasoline or diesel fueling area whose primary function is to provide fuel to equipment or vehicles.

National Pollution Discharge Elimination System. A permit developed by the U.S. EPA through the Clean Water Act. In Indiana, the permitting process has been delegated to IDEM. This permit covers aspects of municipal stormwater quality.

Natural Drainage. The flow patterns of stormwater run-off over the land in its pre-development state.

Nutrient(s). (1) A substance necessary for the growth and reproduction of organisms. (2) In water, those substances (chiefly nitrates and phosphates) that promote growth of algae and bacteria.

Open Drain. A natural watercourse or constructed open channel that conveys drainage water.

Open Space. Any land area devoid of any disturbed or impervious surfaces created by industrial, commercial, residential, agricultural, or other manmade activities.

Outfall. The point, location, or structure where a pipe or open drain discharges to a receiving body of water.

Outlet. The point of water disposal from a stream, river, lake, tidewater, or artificial drain.

Peak Discharge (or Peak Flow). The maximum instantaneous flow from a given storm condition at a specific location.

Percolation. The movement of water through soil.

Permanent stabilization. The establishment, at a uniform density of seventy percent (70%) across the disturbed area, of vegetative cover or permanent non-erosive material that will ensure the resistance of the soil to erosion, sliding, or other movement.

Pervious. Allowing movement of water.

Point Source. Any discernible, confined, and discrete conveyance including but not limited to any pipe, ditch, channel, tunnel, conduit, well, discrete fissure, or container from which pollutants are or maybe discharged (P.L. 92-500, Section 502[14]).

Porous pavement. A type of infiltration practice to improve the quality and reduce the quantity of storm water run-off via the use of manmade, pervious pavement which allows run-off to percolate through the pavement and into underlying soils

Professional Engineer. A person licensed under the laws of the State of Indiana to practice professional engineering.

Project site. The entire area on which construction activity is to be performed.

Project site owner. The person required to submit a stormwater permit application, and required to comply with the terms of this ordinance, including a developer or a person who has financial and operational control of construction activities, and project plans and specifications, including the ability to make modifications to those plans and specifications.

Rain garden. A vegetative practice used to alter impervious surfaces, such as roofs, into pervious surfaces for absorption and treatment of rainfall.

Receiving Stream, Receiving Channel, or Receiving Water. The body of water into which runoff or effluent is discharged. The term does not include private drains, unnamed conveyances, retention and detention basins, or constructed wetlands used as treatment.

Recharge. Replenishment of groundwater reservoirs by infiltration and transmission from the outcrop of an aquifer or from permeable soils.

Redevelopment. Alterations of a property that change a site or building in such a way that there is disturbances of one (1) acre or more of land. The term does not include such activities as exterior remodeling.

Regulatory Flood. The discharge or elevation associated with the 100-year flood as calculated by a method and procedure which is acceptable to and accepted by the Indiana Department of Natural Resources and the Federal Emergency Management Agency. The "regulatory flood" is also known as the "base flood".

Regulatory Floodway. See Floodway.

Release Rate - The amount of storm water release from a storm water control facility per unit of time.

Reservoir. A natural or artificially created pond, lake or other space used for storage, regulation or control of water. May be either permanent or temporary. The term is also used in the hydrologic modeling of storage facilities.

Retention. The storage of stormwater to prevent it from leaving the development site. May be temporary or permanent.

Retention basin. A type of storage practice, that has no positive outlet, used to retain storm water run-off for an indefinite amount of time. Runoff from this type of basin is removed only by infiltration through a porous bottom or by evaporation.

Return Period - The average interval of time within which a given rainfall event will be equaled or exceeded once. A flood having a return period of 100 years has a one percent probability of being equaled or exceeded in any one year.

Riparian zone. Of, on, or pertaining to the banks of a stream, river, or pond.

Riparian habitat. A land area adjacent to a waterbody that supports animal and plant life associated with that waterbody.

Runoff. That portion of precipitation that flows from a drainage area on the land surface, in open channels, or in stormwater conveyance systems.

Runoff Coefficient - A decimal fraction relating the amount of rain which appears as runoff and reaches the stormwater drainage system to the total amount of rain falling. A coefficient of 0.5 implies that 50 percent of the rain falling on a given surface appears as storm water runoff.

Sediment. Solid material (both mineral and organic) that is in suspension, is being transported, or has been moved from its site of origin by air, water, gravity, or ice and has come to rest on the earth's surface.

Sedimentation. The process that deposits soils, debris and other unconsolidated materials either on the ground surfaces or in bodies of water or watercourses.

Sensitive Water. A waterbody in need of priority protection or remediation base on its:

providing habitat for threatened or endangered species,
usage as a public water supply intake,
relevant community value,
usage for full body contact recreation,
exceptional use classification as found in 327 IAC 2-1-11(b), outstanding State resource water classification as found in 327 IAC 2-1-2(3) and 327 IAC 2-1.5-19(b).

Site. The entire area included in the legal description of the land on which land disturbing activity is to be performed.

Slope. Degree of deviation of a surface from the horizontal, measured as a numerical ratio or percent. Expressed as a ratio, the first number is commonly the horizontal distance (run) and the second is the vertical distance (rise)--e.g., 2:1. However, the preferred method for designation of slopes is to clearly identify the horizontal (H) and vertical (V) components (length (L) and Width (W) components for horizontal angles). Also note that according to international standards (Metric), the slopes are presented as the vertical or width component shown on the numerator--e.g., 1V:2H. Slope expressions in this Ordinance follow the common presentation of slopes--e.g., 2:1 with the metric presentation shown in parenthesis--e.g., (1V:2H). Slopes can also be expressed in "percents". Slopes given in percents are always expressed as (100*V/H) --e.g., a 2:1 (1V:2H) slope is a 50% slope.

Soil. The unconsolidated mineral and organic material on the immediate surface of the earth that serves as a natural medium for the growth of land plants.

Soil and Water Conservation District. A public organization created under State law as a special-purpose district to develop and carry out a program of soil, water, and related resource conservation, use, and development within its boundaries. A subdivision of State government with a local governing body, established under IC 14-32.

Solid Waste. Any garbage, refuse, debris, or other discarded material.

Spill. The unexpected, unintended, abnormal, or unapproved dumping, leakage, drainage, seepage, discharge, or other loss of petroleum, hazardous substances, extremely hazardous substances, or objectionable substances. The term does not include releases to impervious surfaces when the substance does not migrate off the surface or penetrate the surface and enter the soil.

Storm Duration. The length of time that water may be stored in any stormwater control facility, computed from the time water first begins to be stored.

Storm Event. An estimate of the expected amount of precipitation within a given period of time. For example, a 10-yr. frequency, 24-hr. duration storm event is a storm that has a 10% probability of occurring in any one year. Precipitation is measured over a 24-hr. period.

Storm Sewer. A closed conduit for conveying collected storm water, while excluding sewage and industrial wastes. Also called a storm drain.

Stormwater. Water resulting from rain, melting or melted snow, hail, or sleet.

Stormwater Pollution Prevention Plan. A plan developed to minimize the impact of storm water pollutants resulting from construction activities.

Stormwater Runoff. The water derived from rains falling within a tributary basin, flowing over the surface of the ground or collected in channels or conduits.

Stormwater Quality Management Plan. A comprehensive written document that addresses stormwater runoff quality.

Stormwater Quality Measure. A practice, or a combination of practices, to control or minimize pollutants associated with storm water runoff.

Stormwater Drainage System - All means, natural or man-made, used for conducting storm water to, through or from a drainage area to any of the following: conduits and appurtenant features, canals, channels, ditches, storage facilities, swales, streams, culverts, streets and pumping stations.

Strip development. A multi-lot project where building lots front on an existing road.

Subdivision. Any land that is divided or proposed to be divided into lots, whether contiguous or subject to zoning requirements, for the purpose of sale or lease as part of a larger common plan of development or sale.

Subsurface Drain. A pervious backfield trench, usually containing stone and perforated pipe, for intercepting groundwater or seepage.

Surface Runoff. Precipitation that flows onto the surfaces of roofs, streets, the ground, etc., and is not absorbed or retained by that surface but collects and runs off.

Swale. An elongated depression in the land surface that is at least seasonally wet, is usually heavily vegetated, and is normally without flowing water. Swales conduct stormwater into primary drainage channels and may provide some groundwater recharge.

Temporary Stabilization. The covering of soil to ensure its resistance to erosion, sliding, or other movement. The term includes vegetative cover, anchored mulch, or other non-erosive material applied at a uniform density of seventy percent (70%) across the disturbed area.

Tile Drain. Pipe made of perforated plastic, burned clay, concrete, or similar material, laid to a designed grade and depth, to collect and carry excess water from the soil.

Topographic Map. Graphical portrayal of the topographic features of a land area, showing both the horizontal distances between the features and their elevations above a given datum.

Topography. The representation of a portion of the earth's surface showing natural and man-made features of a give locality such as rivers, streams, ditches, lakes, roads, buildings and most importantly, variations in ground elevations for the terrain of the area.

Trained individual. An individual who is trained and experienced in the principles of storm water quality, including erosion and sediment control as may be demonstrated by state registration, professional certification, experience, or completion of coursework that enable the individual to make judgments regarding storm water control or treatment and monitoring.

Urban Drain. A drain defined as “Urban Drain” in Indiana Drainage Code.

Urbanization The development, change or improvement of any parcel of land consisting of one or more lots for residential, commercial, industrial, institutional, recreational or public utility purposes.

Vegetated swale. A type of vegetative practice used to filter stormwater runoff via a vegetated, shallow-channel conveyance.

Water Quality. A term used to describe the chemical, physical, and biological characteristics of water, usually in respect to its suitability for a particular purpose.

Water Resources. The supply of groundwater and surface water in a given area.

Waterbody. Any accumulation of water, surface, or underground, natural or artificial, excluding water features designed and designated as water pollution control facilities.

Watercourse. Any river, stream, creek, brook, branch, natural or man-made drainageway in or into which stormwater runoff or floodwaters flow either continuously or intermittently.

Watershed. The region drained by or contributing water to a specific point that could be along a stream, lake or other stormwater facilities. Watersheds are often broken down into subareas for the purpose of hydrologic modeling.

Watershed Area. All land and water within the confines of a drainage divide. See also Watershed.

Wetlands. Areas that are inundated or saturated by surface water or groundwater at a frequency and duration sufficient to support, and that under normal circumstances do support, a prevalence of vegetation typically adapted for life in saturated soil conditions. Wetlands generally include swamps, marshes, bogs, and similar areas. This definition shall be considered to be automatically amended to conform with the definition of a wetlands established from time to time by the United States of America or United States Army Corps of Engineers.

APPENDIX B

ILLICIT DISCHARGE AND CONNECTION STORMWATER ORDINANCE

ORDINANCE NO. 2008 - 02

TOWN OF GRIFFITH, INDIANA
ILLICIT DISCHARGE AND CONNECTION STORMWATER ORDINANCE

SECTION I. PURPOSE/INTENT

The purpose of this ordinance is to provide for the health, safety, and general welfare of the citizens of the Town of Griffith, Indiana hereinafter referred to as Town though the regulation of illicit discharges to the storm drainage system to the maximum extent practicable as required by federal and state law. This ordinance establishes methods for controlling the introduction of pollutants into the municipal separate storm sewer system (MS4) in order to comply with requirements of the National Pollutant Discharge Elimination System (NPDES) permit process. The objectives of this ordinance are:

1. To regulate the contribution of pollutants to the municipal separate storm sewer system (MS4) by stormwater discharges by any user.

2. To prohibit Illicit Connections and Discharges to the municipal separate storm sewer system.

3. To establish legal authority to carry out all inspection, surveillance and monitoring procedures necessary to ensure compliance with this ordinance.

SECTION II. DEFINITIONS

For the purposes of this ordinance, the following shall mean:

Town - employees or designees of the Town of Griffith designated to enforce this ordinance.

Best Management Practices (BMPs) - schedules of activities, prohibitions of practices, general good housekeeping practices, pollution prevention and educational practices, maintenance procedures, and other management practices to prevent or reduce the discharge of pollutants directly or indirectly to stormwater, receiving waters, or stormwater conveyance systems. BMPs also include treatment practices, operating procedures, and practices to control site runoff, spillage or leaks, sludge or water disposal, or drainage from raw materials storage.

Clean Water Act - The Federal Water Pollution Control Act (33 U.S.C. § 1251 et seq.), and any subsequent amendments thereto.

Construction Activity - Activities subject to NPDES Construction Permits. These include construction projects resulting in land disturbance of 1 acre or more. Such activities include but are not limited to clearing and grubbing, grading, excavating, and demolition.

SECTION II. **DEFINITIONS (Continued)**

Hazardous Materials - Any material, including any substance, waste, or combination thereof, which because of its quantity, concentration, or physical, chemical, or infectious characteristics may cause, or significantly contribute to, a substantial present or potential hazard to human health, safety, property, or the environment when improperly treated, stored, transported, disposed of, or otherwise managed.

Illegal Discharge - Any direct or indirect non-stormwater discharge to the storm drain system, except as exempted in Section VII of this ordinance.

Illicit Connections - An illicit connection is defined as either of the following: Any drain or conveyance, whether on the surface or subsurface, which allows an illegal discharge to enter the storm drain system including but not limited to any conveyances which allow any non-stormwater discharge including sewage, process wastewater, and wash water to enter the storm drain system and any connections to the storm drain system from indoor drains and sinks, regardless of whether said drain or connection had been previously allowed, permitted, or approved by the Town or, any drain or conveyance connected from a commercial or industrial land use to the storm drain system which has not been documented in plans, maps, or equivalent records and approved by the Town.

Industrial Activity - Activities subject to NPDES Industrial Permits as defined in 40 CFR, Section 122.26 (b)(14).

MS-4 - "Municipal Separate Storm Sewer System" - means a conveyance or system of conveyances that is: owned, operated or maintained by a public or private body; designed or used for collecting or conveying stormwater; not a combined sewer; and not a publicly owned treatment works.

National Pollutant Discharge Elimination System (NPDES) Stormwater Discharge Permit - means a permit issued by EPA (or by a State under authority delegated pursuant to 33 USC § 1342(b)) that authorizes the discharge of pollutants to waters of the United States, whether the permit is applicable on an individual, group, or general area-wide basis.

Non-Stormwater Discharge - Any discharge to the storm drain system that is not composed entirely of stormwater.

Person - means any individual, association, organization, partnership, firm, corporation or other entity recognized by law and acting as either the owner or as the owner's agent.

Pollutant - Anything which causes or contributes to pollution. Pollutants may include, but are not limited to: paints, varnishes, and solvents; oil and other automotive fluids; nonhazardous liquid and solid wastes and yard wastes; refuse, rubbish, garbage, litter, or other discarded or abandoned objects,

ordinances, and accumulations, so that same may cause or contribute to pollution; floatables; pesticides, herbicides, and fertilizers; hazardous substances and wastes; sewage, fecal coliform and pathogens; dissolved and particulate metals; animal wastes; wastes and residues that result from constructing a building or structure; and noxious or offensive matter of any kind.

SECTION II. DEFINITIONS (Continued)

Premises - Any building, lot, parcel of land, or portion of land whether improved or unimproved including adjacent sidewalks and parking strips.

Private Storm Sewer System - any storm sewer system not owned or maintained by the Town.

Storm Drainage System - Publicly-owned facilities by which stormwater is collected and/or conveyed, including but not limited to any roads with drainage systems, municipal streets, gutters, curbs, inlets, piped storm drains, pumping facilities, retention and detention basins, natural and human-made or altered drainage channels, reservoirs, and other drainage structures.

Stormwater - Any surface flow, runoff, and drainage consisting entirely of water from any form of natural precipitation, and resulting from such precipitation.

Stormwater Pollution Prevention Plan - A document which describes the Best Management Practices and activities to be implemented by a person or business to identify sources of pollution or contamination at a site and the actions to eliminate or reduce pollutant discharges to Stormwater, Stormwater Conveyance Systems, and/or Receiving Waters to the Maximum Extent Practicable.

Wastewater - means any water or other liquid, other than uncontaminated stormwater, discharged from a facility.

SECTION III. APPLICABILITY

This ordinance shall apply to all water entering the storm drain system generated on any developed and undeveloped lands including railroad right of way unless explicitly exempted by the Town.

SECTION IV. RESPONSIBILITY FOR ADMINISTRATION

The Town shall administer, implement, and enforce the provisions of this ordinance. Any powers granted or duties imposed upon the Town may be delegated in writing to persons or entities acting in the beneficial interest of or in the employ of the Town.

SECTION V. SEVERABILITY

The provisions of this ordinance are hereby declared to be severable. If any provision, clause, sentence, or paragraph of this Ordinance or the application thereof to any person, establishment, or circumstances shall be held invalid, such invalidity shall not affect the other provisions or application of this Ordinance.

SECTION VI. ULTIMATE RESPONSIBILITY

The standards set forth herein and promulgated pursuant to this ordinance are minimum standards; therefore this ordinance does not intend nor imply that compliance by any person will ensure that there will be no contamination, pollution, nor unauthorized discharge of pollutants.

SECTION VII. DISCHARGE PROHIBITIONS

Prohibition of Illegal Discharges:

No person shall discharge or cause to be discharged into the municipal storm drain system or watercourses any materials, including but not limited to pollutants or waters containing any pollutants that cause or contribute to a violation of applicable water quality standards, other than stormwater.

The commencement, conduct or continuance of any illegal discharge to the storm drain system is prohibited except as described as follows:

A. The following discharges are exempt from discharge prohibitions established by this ordinance: water line flushing or other potable water sources, landscape irrigation or lawn watering, diverted stream flows, rising groundwater, groundwater infiltration to storm drains, uncontaminated pumped groundwater, foundation or footing drains (not including active groundwater dewatering systems), crawl space pumps, air conditioning condensation, springs, non-commercial washing of vehicles, natural riparian habitat or wet-land flows, swimming pools (if dechlorinated - typically less than one PPM chlorine), fire fighting activities, and any other water source not containing Pollutants.

B. Discharges specified in writing by the Town as being necessary to protect public health and safety.

C. Dye testing is an allowable discharge, but requires a verbal notification to the Town of Griffith Department of Public Works prior to the time of the test.

D. The prohibition shall not apply to any non-stormwater discharge permitted under an NPDES permit, waiver, or waste discharge order issued to the discharger and administered under the authority of the

Federal Environmental Protection Agency, provided that the discharger is in full compliance with all requirements of the permit, waiver, or order and other applicable laws and regulations, and provided that written approval has been granted for any discharge to the storm drain system.

Prohibition of Illicit Connections:

A. The construction, use, maintenance or continued existence of illicit connections to the storm drain system is prohibited.

B. This prohibition expressly includes, without limitation, illicit connections made in the past, regardless of whether the connection was permissible under law or practices applicable or prevailing at the time of connection.

C. A person is considered to be in violation of this ordinance if the person connects a line conveying sewage to the MS4, or allows such a connection to continue.

SECTION VIII. SUSPENSION OF MS4 ACCESS

Suspension Due to Illicit Discharges in Emergency Situations:

The Town may, without prior notice, suspend MS4 discharge access to a person when such suspension is necessary to stop an actual or threatened discharge which presents or may present imminent and substantial danger to the environment, or to the health or welfare of persons, or to the MS4 or Waters of the United States. If the violator fails to comply with a suspension order issued in an emergency, the Town may take such steps as deemed necessary to prevent or minimize damage to the MS4 or Waters of the United States, or to minimize danger to persons.

Suspension Due to the Detection of Illicit Discharge:

Any person discharging to the MS4 in violation of this ordinance may have their MS4 access terminated if such termination would abate or reduce an illicit discharge. The Town will notify a violator of the proposed termination of its MS4 access. The violator may petition the Town for a reconsideration and hearing.

A person violates this ordinance if the person reinstates MS4 access to premises terminated pursuant to this Section, without the prior approval of the Town.

SECTION IX. INDUSTRIAL OR CONSTRUCTION ACTIVITY DISCHARGES

Any person subject to an industrial or construction activity NPDES stormwater discharge permit shall comply with all provisions of such permit. Proof of compliance with said permit may be required in a form acceptable to the Town prior to the allowing of discharges to the MS4.

SECTION X. MONITORING OF DISCHARGES

A. Applicability:

This section applies to all facilities that have stormwater discharges associated with private storm sewer systems and industrial activity, including construction activity.

B. Access to Facilities:

1. The Town shall be permitted to enter and inspect facilities subject to regulation under this ordinance as often as may be necessary to determine compliance with this ordinance. If a discharger has security measures in force which require proper identification and clearance before entry into its premises, the discharger shall make the necessary arrangements to allow access to representatives of the Town.

2. Facility operators shall allow the Town ready access to all parts of the premises for the purposes of inspection, sampling, examination and copying of records that must be kept under the conditions of an NPDES permit to discharge stormwater, and the performance of any additional duties as defined by state and federal law.

3. The Town shall have the right to set up on any permitted facility such devices as are necessary in the opinion of the Town to conduct monitoring and/or sampling of the facility's stormwater discharge, at the facility's expense.

4. The Town has the right to require the discharger to install monitoring equipment as necessary. The facility's sampling and monitoring equipment shall be maintained at all times in a safe and proper operating condition by the discharger at its own expense. All devices used to measure stormwater flow and quality shall be calibrated to ensure their accuracy.

5. Any temporary or permanent obstruction to safe and easy access to the facility to be inspected and/or sampled shall be promptly removed by the operator at the written or oral request of the Town and shall not be replaced. The costs of clearing such access shall be borne by the operator.

6. Unreasonable delays in allowing the Town access to a permitted facility is a violation of a stormwater discharge permit and of this ordinance. A person who is the operator of a facility with an NPDES permit to discharge stormwater associated with industrial activity commits an offense if the person denies the Town reasonable access to the permitted facility for the purpose of conducting any activity authorized or required by this ordinance.

7. If the Town has been refused access to any part of the premises from which stormwater is discharged, and he/she is able to demonstrate probable cause to believe that there may be a violation of this ordinance, or that there is a need to inspect and/or sample as part of a routine inspection and sampling program designed to verify compliance with this ordinance or any order issued hereunder, or to protect the overall public health, safety, and welfare of the community, then the Town may seek issuance of a search warrant from any court of competent jurisdiction.

SECTION XI. REQUIREMENT TO PREVENT, CONTROL, AND REDUCE STORMWATER POLLUTANTS BY THE USE OF BEST MANAGEMENT PRACTICES

Best Management Practices will be required for any activity, operation, or facility which may cause or contribute to pollution or contamination of stormwater, the storm drain system, or waters of the U.S. The owner or operator of a commercial or industrial establishment shall provide, at their own expense, reasonable protection from accidental discharge of prohibited materials or other wastes into the municipal storm drain system or watercourses through the use of structural and non-structural BMPs. Further, any person responsible for a property or premise, which is, or may be, the source of an illicit discharge, may be required to implement, at said person's expense, additional structural and nonstructural BMPs to prevent the further discharge of pollutants to the municipal separate storm sewer system. Compliance with all terms and conditions of a valid NPDES permit authorizing the discharge of stormwater associated with industrial activity, to the extent practicable, shall be deemed compliance with the provisions of this section. These BMPs shall be part of a stormwater pollution prevention plan (SWPP) as necessary for compliance with requirements of the NPDES permit.

SECTION XII. WATERCOURSE PROTECTION

Every person owning property through which a watercourse passes, or such person's lessee, shall keep and maintain that part of the watercourse within the property free of trash, debris, excessive vegetation, and other obstacles that would pollute, contaminate, or significantly retard the flow of water through the watercourse. In addition, the owner or lessee shall maintain existing privately owned structures within or adjacent to a watercourse, so that such structures will not become a hazard to the use, function, or physical integrity of the watercourse.

SECTION XIII. NOTIFICATION OF SPILLS

Notwithstanding other requirements of law, as soon as any person responsible for a facility or operation, or responsible for emergency response for a facility or operation has information of any known or suspected release of materials which are resulting or may result in illegal discharges or pollutants discharging into stormwater, the storm drain system, or water of the U.S. said person shall take all necessary steps to ensure the discovery, containment, and cleanup of

such release. In the event of such a release of hazardous materials said person shall immediately notify emergency response agencies of the occurrence via emergency dispatch services. In the event of a release of non-hazardous materials, said person shall notify the authorized enforcement agency in person or by phone or facsimile no later than the next business day. Notifications in person or by phone shall be confirmed by written notice addressed and mailed to the Town within three business days of the phone notice. If the discharge of prohibited materials emanates from a commercial or industrial establishment, the owner or operator of such establishment shall also retain an on-site written record of the discharge and the actions taken to prevent its recurrence. Such records shall be retained for at least three years.

SECTION XIV. ENFORCEMENT

A. Notice of Violation:

Whenever the Town finds that a person has violated a prohibition or failed to meet a requirement of this Ordinance, the Town may order compliance by written notice of violation to the responsible person. Such notice may require at the expense of the responsible person, without limitation:

1. The performance or monitoring, analyses, and reporting;
2. The elimination of illicit connections or discharges;
3. That violating discharges, practices, or operations shall cease and desist;
4. The abatement or remediation of stormwater pollution or contamination hazards and the restoration of any affected property;
5. Payment of a fine up to $2,500.00 per day (*see Section XXI*) in addition to remediation costs to cover administrative and remediation costs; and
6. The implementation of source control or treatment BMPs.

If abatement of a violation and/or restoration of affected property is required, the notice shall set forth a deadline within which such remediation or restoration must be completed. Said notice shall further advise that, should the violator fail to remediate or restore within the established deadline, the work will be done by the Town or a contractor and the expense thereof shall be charged to the violator.

SECTION XV. APPEAL OF NOTICE OF VIOLATION

Any person receiving a Notice of Violation may appeal the determination of the Town. A written notice of appeal must be received by the Town within 10 days from the date of the Notice of Violation. Hearing on the appeal before the

appropriate authority or his/her designee shall take place within 15 days from the date of receipt of the notice of appeal. The decision of the Town or their designee shall be final.

SECTION XVI. ENFORCEMENT MEASURES AFTER APPEAL

If the violation has not been corrected pursuant to the requirements set forth in the Notice of Violation, or, in the event of an appeal, within 30 days of the decision of the Town, then representatives of the Town shall enter upon the subject private property and are authorized to take any and all measures necessary to abate the violation and/or restore the property. It shall be unlawful for any person, owner, agent or person in possession of any premises to refuse to allow the Town or designated contractor to enter upon the premises for the purposes set forth above.

SECTION XVII. COST OF ABATEMENT OF THE VIOLATION

Within 15 days after abatement of the violation, the owner of the property will be notified of the cost of abatement, including administrative costs and attorney and engineering fees, if any. The property owner may file a written protest objecting to the amount of the assessment within 10 days. If the amount due is not paid within a timely manner as determined by the decision of the Town or by the expiration of the time in which to file an appeal, the charges shall become a special assessment against the property and shall constitute a lien on the property for the amount of the assessment.

SECTION XVIII. INJUNCTIVE RELIEF

It shall be unlawful for any person to violate any provision or fail to comply with any of the requirements of this ordinance. If a person has violated or continues to violate the provisions of this ordinance, in addition to any other remedies available to the Town, the Town may petition for a preliminary or permanent injunction restraining the person from activities which would create further violations or compelling the person to perform abatement or remediation of the violation.

SECTION XIX. COMPENSATORY ACTION

In lieu of enforcement proceedings, penalties, and remedies authorized by this Ordinance, the Town may impose upon a violator alternative compensatory actions, such as storm drain stenciling, attendance at compliance workshops, creek cleanup, etc.

SECTION XX. VIOLATION DEEMED A PUBLIC NUISANCE

In addition to the enforcement processes and penalties provided, any condition caused or permitted to exist in violation of any of the provisions of this Ordinance is a threat to public health, safety, and welfare, and is declared and deemed a nuisance, and may be summarily abated or restored at the violator's expense, and/or a civil action to abate, enjoin, or otherwise compel the cessation of such nuisance may be taken.

SECTION XXI. **VIOLATIONS**

Any person that has violated or continues to violate this ordinance may be subject to a maximum penalty of $2,500.00 per day. Each day the violation occurs or continues shall be deemed a separate violation.

The Town may recover all attorneys' fees, court costs and other expenses associated with enforcement of this ordinance, including sampling and monitoring expenses.

SECTION XXII. **REMEDIES NOT EXCLUSIVE**

The remedies listed in this ordinance are not exclusive of any other remedies available under any applicable federal, state or local law and it is within the discretion of the Town to seek cumulative remedies.

SECTION XXIII. **ADOPTION OF ORDINANCE**

This ordinance shall be in full force and effect __ days after its final passage and adoption. All prior ordinances and parts of ordinances in conflict with this ordinance are hereby repealed. If any portion of this ordinance is illegal, remaining portion shall remain in effect.

PASSED AND ADOPTED by the Town Council of the Town of Griffith, Lake County, Indiana, this 15TH day of JANUARY, 2008.

TOWN COUNCIL OF THE TOWN OF
GRIFFITH, LAKE COUNTY, INDIANA

Stanley Dobosz

Stan Dobosz

Michael Gulley

Michael Gulley

Glen Gaby

Rick Ryfa

George Jerome

Attest:

Ronald J. Szafarczyk

Ronald J. Szafarczyk
Clerk-Treasurer

APPENDIX C

EROSION AND SEDIMENT CONTROL ORDINANCE

ORDINANCE NO. 2008 - 01

TOWN OF GRIFFITH, INDIANA
EROSION AND SEDIMENT CONTROL ORDINANCE

SECTION 1. INTRODUCTION/PURPOSE

The purpose of this ordinance is to establish requirements within the Town of Griffith for storm water discharges from construction activities of one (1) acre or more so that the public health, existing water uses, and aquatic biota are protected. The ordinance will promote the public welfare by guiding, regulating and controlling the design, construction, inspection, use and maintenance of any development or other activity that disturbs or breaks the topsoil or results in the movement of earth in the Town of Griffith.

During the construction process, soil is vulnerable to erosion by wind and water. Eroded soil endangers water resources by reducing water quality and causing the siltation of aquatic habitat for fish and other desirable species. Eroded soil also necessitates repair of sewers and ditches and the dredging of lakes. In addition, clearing and grading during construction cause the loss of native vegetation necessary for terrestrial and aquatic habitat.

The Federal Clean Water Act, 33 U.S.C. 1251 et seq. and Rule 13 of the State of Indiana, 327 IAC 15-13 designates and requires the Town of Griffith, Indiana to implement, manage and enforce a program to reduce or eliminate pollutants in storm water runoff from construction activities that result in land disturbance equal to or greater than one acre and control of storm water discharges from construction activity disturbing less than one acre if that construction activity is part of a larger common plan of development or sale that would disturb one acre or more.

Rule 5 - Storm Water Run-off Associated with Construction Activity in Indiana, 327 IAC 15-5, as amended, establishes specific minimum requirements for control of storm water run-off associated with construction activity. The requirements of Rule 5 shall be met, except as specifically noted herein.

SECTION 2. APPLICABILITY OF GENERAL PERMIT RULES

The applicability of the General Permit Rules are as defined in 327 IAC 15-5-2 and 15-5-3 of Rule 5.

SECTION 3. DEFINITIONS

All other definitions that apply throughout this ordinance are as contained in 327 IAC 15-5-4 of Rule 5, and as follows:

Town - employees or designees of the Town of Griffith designated to enforce this ordinance.

SECTION 4. NOTICE OF INTENT LETTER

The Notice of Intent Letter (NOI) submittal requirements and construction plan submittal requirements shall be as described in 327 IAC 15_5_5 and 327 IAC 15-5_6 of Rule 5. The NOI shall be submitted to the Town of Griffith MS4 Operator, the

Indiana Department of Environmental Management, the Lake County Soil and Water Conservation District and any other entity as required by Rule 5.

SECTION 5. **CONSTRUCTION PLAN REQUIREMENTS**

The Erosion and Sediment Control Plan (ESCP) requirements shall be as described in 327 IAC 15_5-6.5 of Rule 5.

SECTION 6. **STORM WATER QUALITY CONTROL REQUIREMENTS**

Storm water quality control measures included in the ESCP must achieve the minimum project site requirements specified in 327 IAC 15_5_7 and 327 IAC 15-5_7.5 of Rule 5.

SECTION 7. **SITE DEVELOPMENT PERMIT**

No construction project site owner (permittee) shall be granted a Site Development Permit for a project site where the proposed land disturbance is one (1) acre or more without the approval of the ESCP by the Town of Griffith MS4 Operator.

The ESCP shall be submitted by the construction project site owner in triplicate to the Town of Griffith, Attn: MS4 Operator, 111 North Broad Street, Griffith, IN, 46319.

The Town of Griffith MS4 Operator shall provide a copy of the ESCP to the local Soil and Water Conservation District (SWCD) for their comments and recommendations. All comments received by the local SWCD shall be made available to the applicant during the review and approval process.

Each ESCP submittal shall include the name, address and phone number of the Owner or Developer of the site and any consulting firm retained by the applicant together with the name of the applicant's principal contact at such firm. It shall also include a statement by the Owner or Developer of the site that any land clearing, construction, or development involving the movement of earth by any party on the project site shall be in accordance with the approved ESCP. All ESCP's shall be accompanied by a $150.00 filing fee made payable to the Town of Griffith.

The Site Development Permit is granted by the MS4 Operator for a period of five (5) years. Other provisions for duration of coverage shall be as described in 327 IAC 15_5_12 of Rule 5.

SECTION 8. **INSPECTION**

The Town of Griffith or designated agent of the Town shall make inspections as required and either shall approve that portion of the work completed or shall notify the permittee that the work fails to comply with the approved ESCP.

To initiate inspections, the permittee shall notify the Town's MS4 Operator or designated representative, in writing, at least two working days before the following: start of construction, completion of site clearing, close of construction season, commencement of work when the site has been dormant for at least twenty calendar days and completion of final landscaping.

The permittee shall make regular inspections of all control measures in accordance with 327 IAC 15_5_7 of Rule 5. The purpose of such inspections will be to determine the overall effectiveness of the control plan and the need for additional correctional

measures.

SECTION 9. PROJECT TERMINATION

The procedures for termination of construction activities shall be as described in 327 IAC 15_5_8 of Rule 5.

SECTION 10. ENFORCEMENT

The Town of Griffith and any designated agent of the Town shall have the authority to enforce this ordinance. All persons engaging in construction activities on a project site must comply with the approved ESCP for the project site and with the requirements, provisions and regulations of this ordinance. Any person causing or contributing to a violation of any requirement, provision, or regulation of this ordinance may be subject to enforcement and penalty under the terms of this ordinance. If the violation is of such a nature to materially adversely affect the public health, existing water uses and aquatic biota of the Town of Griffith, the Town or a designated agent may suspend or revoke the Site Development Permit and place an immediate "Stop Work Order" at the site.

Each action causing a violation will constitute a separate and single violation. Each day that a violation exists constitutes a separate violation, and is subject to penalty or prosecution as a separate violation.

Any person performing land disturbing activities prior to submitting an ESCP for approval by the Town and properly notifying IDEM shall be subject to enforcement and penalty as described in 327 IAC 15_5_10 of Rule 5 as well as those designated by the Town.

Penalty Procedures

The Town or a designated representative will employ the following procedures with regard to assigning penalties to enforce the requirements, provisions and regulations of this ordinance.

1. **First Violation** _ means the initial determination of a violation or group of violations at a project site including not obtaining a permit. Upon ascertaining and documenting the occurrence of a first violation at a project site, the MS4 Operator or designated representative will make a corrective recommendation to the owner/developer responsible for correcting the violation, together with a notice that the correction must be accomplished within ten (10) working days after the issuance of the notice to prevent the citation of a second violation with regard ta the same condition or conditions that caused the first violation.

2. **Second Violation** _ means the determination that after ten (10) working days past the notification of a first violation, the condition or conditions constituting the first violation remain uncorrected or otherwise not complaint with the requirements, provisions or regulations of this ordinance. Upon ascertaining and documenting the occurrence of a second violation at a project site, the MS4 Operator or designated representative will again issue a non-compliance citation to the owner/developer along with a notice that the correction must be accomplished with five (5) calendar days from the date the citation to prevent the citation of a third violation regarding the same condition. The civil penalty for a second violation shall not exceed $500.00

per day for each day of the five (5) day period the violation exists. If the penalty is not paid within thirty (30) days, the citation may be enforced in Court by any remedy allowed by Law and an action may be maintained to recover the costs of corrective measures employed by the Town of Griffith, including attorney and engineering fees if the owner/developer does not make a good faith effort to correct the violation, in addition to the fine or penalty referred to above.

3. **Third Violation** _ means the determination that after five (5) working days past the notification of a second violation, the condition or conditions constituting the second violation remain uncorrected or otherwise noncompliant with the requirements, provisions, or regulations of the ordinance. Upon ascertaining and documenting the occurrence of a third violation at a project site, the MS4 operator or designated representative will issue another non-compliance citation to the owner/developer together with a notice that the project site is subject to an immediate "Stop Work" order. The civil penalty for a third violation shall not exceed $2,500.00 per day. Each day the violation occurs or continues shall be deemed a separate violation. If the penalty is not paid within thirty (30) days, the citation may be enforced Court by any remedy allowed by Law and an action may be maintained to recover the costs of corrective measures employed by the Town of Griffith, including attorney and engineering fees if the owner/developer does not make a good faith effort to correct the violation, in addition to the fine or penalty referred to above.

Stop Work orders will not be rescinded until all recommended corrective measures have been completed and the Town has been paid for all costs incurred, as applicable.

The Town of Griffith reserves the right to accelerate the schedule assigned in this section for correcting a violation if required to protect life or property from an eminent and severe threat of loss or damage.

The Town of Griffith may perform, or cause to be performed, such work as is necessary to accomplish corrective measures at a project site by their own forces or by a contractor hired to perform the work, at the violator's expense.

In addition to fines imposed, any project site owner, individual lot operator, contractor, subcontractor, property owner, or other person or persons responsible for construction activities at a project site who violate the terms, requirements, provisions, or regulations of this ordinance are liable for the costs of removal of sediment and other storm water pollutants deposited in any right-of-way, drain, storm sewer, drainage easement, or Town maintained or controlled property to a condition equal to or better than the condition prior to a violation. Such costs may be pursued in Court and/or filed as a lien against the property.

SECTION 11. **SEPARABILITY**

The provisions and sections of this Ordinance shall be deemed to be separable and the invalidity of any portion of this Ordinance shall not affect the validity of the remainder.

SECTION 12: **ADOPTION OF ORDINANCE**

This ordinance shall be in full force and effect __ days after its final passage and

adoption. All prior ordinances and parts of ordinances in conflict with this ordinance are hereby repealed.

PASSED AND ADOPTED by the Town Council of the Town of Griffith, Lake County, Indiana, this 15TH day of JANUARY, 2008.

TOWN COUNCIL OF THE TOWN OF
GRIFFITH, LAKE COUNTY, INDIANA

Stanley Dobosz

Stan Dobosz

Michael Gulley

Michael Gulley

Glen Gaby

Rick Ryfa

George Jerome

Attest:

Ronald J. Szafarczyk
Clerk-Treasurer

RULE 5
STORM WATER RUN-OFF ASSOCIATED WITH CONSTRUCTION ACTIVITY

hundred fifty (250) persons or having gross annual sales or expenditures exceeding twenty-five million dollars ($25,000,000) (in second quarter 1980 dollars), if authority to sign documents has been assigned or delegated to the manager in accordance with corporate procedures.

(B) For a partnership or sole proprietorship, by a general partner or the proprietor, respectively.

(C) For a municipality, state, federal, or other public agency or political subdivision thereof, by either a principal executive officer or ranking elected official.

(2) A person is a duly authorized representative only if:

(A) the authorization is made in writing by a person described under subdivision (1);

(B) the authorization specifies either an individual or a position having responsibility for the overall operation of the regulated facility or activity, such as the position of plant manager, operator of a well or a well field, superintendent, or position of equivalent responsibility (a duly authorized representative may thus be either a named individual or any individual occupying a named position); and

(C) the written authorization is submitted to the commissioner.

(3) Any person signing a document under this section shall make the following certification:

"I certify under penalty of law that this document and all attachments were prepared under my direction or supervision in accordance with a system designed to assure that qualified personnel properly gather and evaluate the information submitted. Based on my inquiry of the person or persons who manage the system, or those persons directly responsible for gathering the information, the information submitted is, to the best of my knowledge and belief, true, accurate, and complete. I am aware that there are significant penalties for submitting false information, including the possibility of fine and imprisonment for knowing violations.".

(h) Except for data determined to be confidential under 327 IAC 12 *[327 IAC 12 was repealed filed Mar 9, 2000, 7:47 a.m.: 23 IR 1637. See 327 IAC 12.1.]*, all reports prepared in accordance with the terms of the applicable general permit rule shall be available for public inspection at the offices of the Indiana department of environmental management and the U.S. Environmental Protection Agency Regional Administrator. As required by the Federal Act, information contained in the NOI letter and effluent data shall not be considered confidential.

(i) The Indiana Environmental Management Act at IC 13-7-13-3(b) provides that any person who knowingly makes any false statement, representation, or certification in any record or other document submitted or required to be maintained under the applicable general permit rule, including monitoring reports or reports of compliance or noncompliance, shall, upon conviction, be punished by a fine of not more than ten thousand dollars ($10,000) per violation, or by imprisonment for not more than six (6) months per violation, or by both. The Federal Act, as well as IC 13-7-13-3 and IC 35-50-3-3, provides that any person who falsifies, tampers with, or knowingly renders inaccurate any monitoring device or method required to be maintained under this article shall, upon conviction, be punished by a fine of not more than ten thousand dollars ($10,000) per violation, or by imprisonment for not more than one hundred eighty (180) days per violation, or by both. *(Water Pollution Control Board; 327 IAC 15-4-3; filed Aug 31, 1992, 5:00 p.m.: 16 IR 21; errata filed Apr 10, 2006, 2:46 p.m.: 29 IR 2547)*

Rule 5. Storm Water Run-Off Associated with Construction Activity

327 IAC 15-5-1 Purpose

Authority: IC 13-14-8; IC 13-14-9; IC 13-15-1-2; IC 13-15-2-1; IC 13-18-3
Affected: IC 13-11-2; IC 13-18-4

Sec. 1. The purpose of this rule is to establish requirements for storm water discharges from construction activities of one (1) acre or more so that the public health, existing water uses, and aquatic biota are protected. *(Water Pollution Control Board; 327 IAC 15-5-1; filed Aug 31, 1992, 5:00 p.m.: 16 IR 23; errata, 16 IR 898; readopted filed Jan 10, 2001, 3:23 p.m.: 24 IR 1518; filed Oct 27, 2003, 10:15 a.m.: 27 IR 833; readopted filed Nov 21, 2007, 1:16 p.m.: 20071219-IR-327070553BFA)*

327 IAC 15-5-2 Applicability of general permit rules

Authority: IC 13-14-8; IC 13-14-9; IC 13-15-1-2; IC 13-15-2-1; IC 13-18-3
Affected: IC 13-11-2; IC 13-18-4; IC 14-34

Sec. 2. (a) The requirements under this rule apply to all persons who:

(1) do not obtain an individual NPDES permit under 327 IAC 15-2-6;
(2) meet the general permit rule applicability requirements under 327 IAC 15-2-3; and
(3) are involved in construction activity, except operations that result in the land disturbance of less than one (1) acre of total land area as determined under subsection (h) and are not part of a larger common plan of development or sale.
(b) The requirements under this rule do not apply to persons who are involved in:
(1) agricultural land disturbing activities; or
(2) forest harvesting activities.
(c) The requirements under this rule do not apply to the following activities, provided other applicable permits contain provisions requiring immediate implementation of soil erosion control measures:
(1) Landfills that have been issued a certification of closure under 329 IAC 10.
(2) Coal mining activities permitted under IC 14-34.
(3) Municipal solid waste landfills that are accepting waste pursuant to a permit issued by the department under 329 IAC 10 that contains equivalent storm water requirements, including the expansion of landfill boundaries and construction of new cells either within or outside the original solid waste permit boundary.
(d) The project site owner has the following responsibilities:
(1) Complete a sufficient notice of intent letter.
(2) Ensure that a sufficient construction plan is completed and submitted in accordance with section 6 of this rule.
(3) Ensure compliance with this rule during:
(A) the construction activity; and
(B) implementation of the construction plan.
(4) Notify the department with a sufficient notice of termination letter.
(5) Ensure that all persons engaging in construction activities on a permitted project site comply with the applicable requirements of this rule and the approved construction plan.
(e) For off-site construction activities that provide services (for example, road extensions, sewer, water, and other utilities) to a permitted project site, these off-site activity areas must be considered a part of the permitted project site when the activity is under the control of the project site owner.
(f) For an individual lot where land disturbance is expected to be one (1) acre or more and the lot lies within a project site permitted under this rule, the individual lot owner shall:
(1) complete his or her own notice of intent letter; and
(2) ensure that a sufficient construction plan is completed and submitted in accordance with section 6 of this rule.
(g) For an individual lot where the land disturbance is less than one (1) acre and the lot lies within a project site permitted under this rule, the individual lot operator shall be in accordance with the following:
(1) Comply with:
(A) the provisions and requirements of the plan developed by the project site owner; and
(B) section 7.5 of this rule.
(2) Does not need to submit a notice of intent letter and construction plans.
(h) Multilot project sites are regulated by this rule in accordance with the following:
(1) A determination of the area of land disturbance shall be calculated by adding the total area of land disturbance for improvements, such as roads, utilities, or common areas, and the expected total disturbance on each individual lot, as determined by the following:
(A) For a single-family residential project site where the lots are one-half (0.5) acre or more, one-half (0.5) acre of land disturbance must be used as the expected lot disturbance.
(B) For a single-family residential project site where the lots are less than one-half (0.5) acre in size, the total lot must be calculated as being disturbed.
(C) To calculate lot disturbance on all other types of project sites, such as industrial and commercial project sites, the following apply:
(i) Where lots are one (1) acre or greater in size, a minimum of one (1) acre of land disturbance must be calculated as the expected lot disturbance.
(ii) Where the lots are less than one (1) acre in size, the total lot must be calculated as being disturbed.
(2) For purposes of this rule, strip developments:
(A) are considered as one (1) project site; and

(B) must comply with this rule;

unless the total combined disturbance on all individual lots is less than one (1) acre and is not part of a larger common plan of development or sale.

(i) Submittal of a notice of intent and construction plans is not required for construction activities associated with a single-family residential dwelling disturbing less than five (5) acres when the dwelling is not part of a larger common plan of development or sale. Provisions in section 7(b)(1) through 7(b)(5), 7(b)(10) through 7(b)(17), 7(b)(19), and 7(b)(20) of this rule shall be complied with throughout construction activities and until the areas are permanently stabilized.

(j) The department may waive the permit requirements under this rule for construction activities that disturb less than five (5) acres where the waiver applicant determined by the commissioner certifies that:

(1) a total maximum daily load (TMDL) for the pollutants of concern from storm water discharges associated with construction activity indicates that controls on construction site discharges are not needed to protect water quality; or

(2) in receiving waters that do not require a TMDL study, an equivalent analysis demonstrates water quality is not threatened by storm water discharges, and it has been determined that allocations for the pollutants of concern from the construction site discharges are not needed to protect water quality based on consideration of existing in-stream concentrations, expected growth in pollutant contributions from all sources, and a margin of safety.

(Water Pollution Control Board; 327 IAC 15-5-2; filed Aug 31, 1992, 5:00 p.m.: 16 IR 23; readopted filed Jan 10, 2001, 3:23 p.m.: 24 IR 1518; filed Oct 27, 2003, 10:15 a.m.: 27 IR 833; readopted filed Nov 21, 2007, 1:16 p.m.: 20071219-IR-327070553BFA)

327 IAC 15-5-3 General permit rule boundary

Authority: IC 13-14-8; IC 13-14-9; IC 13-15-1-2; IC 13-15-2-1; IC 13-18-3
Affected: IC 13-11-2; IC 13-18-4

Sec. 3. This general permit covers all lands within Indiana. *(Water Pollution Control Board; 327 IAC 15-5-3; filed Aug 31, 1992, 5:00 p.m.: 16 IR 23; readopted filed Jan 10, 2001, 3:23 p.m.: 24 IR 1518; filed Oct 27, 2003, 10:15 a.m.: 27 IR 834; readopted filed Nov 21, 2007, 1:16 p.m.: 20071219-IR-327070553BFA)*

327 IAC 15-5-4 Definitions

Authority: IC 13-14-8; IC 13-14-9; IC 13-15-1-2; IC 13-15-2-1; IC 13-18-3
Affected: IC 13-11-2; IC 14-32; IC 14-34

Sec. 4. In addition to the definitions contained in IC 13-11-2, 327 IAC 1, 327 IAC 5, and 327 IAC 15-1-2, the following definitions apply throughout this rule:

(1) "Agricultural conservation practices" means practices that are constructed on agricultural land for the purposes of controlling soil erosion and sedimentation. These practices include grass waterways, sediment basins, terraces, and grade stabilization structures.

(2) "Agricultural land disturbing activity" means tillage, planting, cultivation, or harvesting operations for the production of agricultural or nursery vegetative crops. The term also includes pasture renovation and establishment, the construction of agricultural conservation practices, and the installation and maintenance of agricultural drainage tile. For purposes of this rule, the term does not include land disturbing activities for the construction of agricultural related facilities, such as:

(A) barns;
(B) buildings to house livestock;
(C) roads associated with infrastructure;
(D) agricultural waste lagoons and facilities;
(E) lakes and ponds;
(F) wetlands; and
(G) other infrastructure.

(3) "Commissioner" refers to the commissioner of the department.

(4) "Construction activity" means land disturbing activities and land disturbing activities associated with the construction of infrastructure and structures. This term does not include routine ditch or road maintenance or minor landscaping projects.

(5) "Construction plan" means a representation of a project site and all activities associated with the project. The plan includes the location of the project site, buildings and other infrastructure, grading activities, schedules for implementation, and other

pertinent information related to the project site. A storm water pollution prevention plan is a part of the construction plan.
(6) "Construction site access" means a stabilized stone surface at all points of ingress or egress to a project site for the purpose of capturing and detaining sediment carried by tires of vehicles or other equipment entering or exiting the project site.
(7) "Contractor" or "subcontractor" means an individual or company hired by the project site or individual lot owner, their agent, or the individual lot operator to perform services on the project site.
(8) "Department" refers to the department of environmental management.
(9) "Developer" means:
(A) any person financially responsible for construction activity; or
(B) an owner of property who sells or leases, or offers for sale or lease, any lots in a subdivision.
(10) "DNR-DSC" means the division of soil conservation of the department of natural resources.
(11) "Erosion" means the detachment and movement of soil, sediment, or rock fragments by water, wind, ice, or gravity.
(12) "Erosion and sediment control measure" means a practice, or a combination of practices, to control erosion and resulting sedimentation.
(13) "Erosion and sediment control system" means the use of appropriate erosion and sediment control measures to minimize sedimentation by first reducing or eliminating erosion at the source and then, as necessary, trapping sediment to prevent it from being discharged from or within a project site.
(14) "Final stabilization" means the establishment of permanent vegetative cover or the application of a permanent nonerosive material to areas where all land disturbing activities have been completed and no additional land disturbing activities are planned under the current permit.
(15) "Grading"means the cutting and filling of the land surface to a desired slope or elevation.
(16) "Impervious surface" means surfaces, such as pavement and rooftops, that prevent the infiltration of storm water into the soil.
(17) "Individual building lot" means a single parcel of land within a multiparcel development.
(18) "Individual lot operator" means a contractor or subcontractor working on an individual lot.
(19) "Individual lot owner" means a person who has financial control of construction activities for an individual lot.
(20) "Land disturbing activity" means any manmade change of the land surface, including removing vegetative cover that exposes the underlying soil, excavating, filling, transporting, and grading.
(21) "Larger common plan of development or sale" means a plan, undertaken by a single project site owner or a group of project site owners acting in concert, to offer lots for sale or lease; where such land is contiguous, or is known, designated, purchased or advertised as a common unit or by a common name, such land shall be presumed as being offered for sale or lease as part of a larger common plan. The term also includes phased or other construction activity by a single entity for its own use.
(22) "Measurable storm event" means a precipitation event that results in a total measured precipitation accumulation equal to, or greater than, one-half (0.5) inch of rainfall.
(23) "MS4 area" means a land area comprising one (1) or more places that receives coverage under one (1) NPDES storm water permit regulated by 327 IAC 15-13 or 327 IAC 5-4-6(a)(4) and 327 IAC 5-4-6(a)(5).
(24) "MS4 operator" means the person responsible for development, implementation, or enforcement of the minimum control measures for a designated MS4 area regulated under 327 IAC 15-13.
(25) "Municipal separate storm sewer system" or "MS4" has the same meaning set forth at 327 IAC 15-13-5(42).
(26) "Peak discharge" means the maximum rate of flow during a storm, usually in reference to a specific design storm event.
(27) "Permanent stabilization" means the establishment, at a uniform density of seventy percent (70%) across the disturbed area, of vegetative cover or permanent nonerosive material that will ensure the resistance of the soil to erosion, sliding, or other movement.
(28) "Phasing of construction" means sequential development of smaller portions of a large project site, stabilizing each portion before beginning land disturbance on subsequent portions, to minimize exposure of disturbed land to erosion.
(29) "Project site" means the entire area on which construction activity is to be performed.
(30) "Project site owner" means the person required to submit the NOI letter under this article and required to comply with the terms of this rule, including either of the following:
(A) A developer.
(B) A person who has financial and operational control of construction activities and project plans and specifications, including the ability to make modifications to those plans and specifications.
(31) "Sediment" means solid material (both mineral and organic) that is in suspension, is being transported, or has been moved

from its site of origin by air, water, gravity, or ice and has come to rest on the earth's surface.
(32) "Sedimentation" means the settling and accumulation of unconsolidated sediment carried by storm water run-off.
(33) "Soil" means the unconsolidated mineral and organic material on the surface of the earth that serves as the natural medium for the growth of plants.
(34) "Soil and Water Conservation District" or "SWCD" means a political subdivision established under IC 14-32.
(35) "Storm water pollution prevention plan" means a plan developed to minimize the impact of storm water pollutants resulting from construction activities.
(36) "Storm water quality measure" means a practice, or a combination of practices, to control or minimize pollutants associated with storm water run-off.
(37) "Strip development" means a multilot project where building lots front on an existing road.
(38) "Subdivision" means any land that is divided or proposed to be divided into lots, whether contiguous or subject to zoning requirements, for the purpose of sale or lease as part of a larger common plan of development or sale.
(39) "Temporary stabilization" means the covering of soil to ensure its resistance to erosion, sliding, or other movement. The term includes vegetative cover, anchored mulch, or other nonerosive material applied at a uniform density of seventy percent (70%) across the disturbed area.
(40) "Tracking" means the deposition of soil that is transported from one (1) location to another by tires, tracks of vehicles, or other equipment.
(41) "Trained individual" means an individual who is trained and experienced in the principles of storm water quality, including erosion and sediment control as may be demonstrated by state registration, professional certification, experience, or completion of coursework that enable the individual to make judgments regarding storm water control or treatment and monitoring.

(Water Pollution Control Board; 327 IAC 15-5-4; filed Aug 31, 1992, 5:00 p.m.: 16 IR 23; readopted filed Jan 10, 2001, 3:23 p.m.: 24 IR 1518; filed Oct 27, 2003, 10:15 a.m.: 27 IR 834; errata filed Feb 4, 2004, 1:45 p.m.: 27 IR 2284; readopted filed Nov 21, 2007, 1:16 p.m.: 20071219-IR-327070553BFA)

327 IAC 15-5-5 Notice of intent letter requirements

Authority: IC 13-14-8; IC 13-15-1-2; IC 13-15-2; IC 13-18-3; IC 13-18-4
Affected: IC 13-12-3-1; IC 13-18-1

Sec. 5. (a) The following information must be submitted by the project site owner with a complete NOI letter under this rule:
(1) Name, mailing address, and location of the project site for which the notification is submitted.
(2) The project site owner's name, address, telephone number, e-mail address (if available), ownership status as federal, state, public, private, or other entity.
(3) Contact person (if different than project site owner), person's name, company name, address, e-mail address (if available), and telephone number.
(4) A brief description of the construction project, including a statement of the total acreage of the project site. Total acreage claimed in the NOI letter shall be consistent with the acreage covered in the construction plan.
(5) Estimated dates for initiation and completion of construction activities. Within forty-eight (48) hours of the initiation of construction activity, the project site owner must notify the commissioner and the appropriate plan reviewing agency of the actual project start date.
(6) The latitude and longitude of the approximate center of the project site to the nearest fifteen (15) seconds, and the nearest quarter section, township, range, and civil township in which the project site is located.
(7) Total impervious surface area, in square feet, of the final project site including structures, roads, parking lots, and other similar improvements.
(8) The number of acres to be involved in the construction activities.
(9) Proof of publication in a newspaper of general circulation in the affected area that notified the public that a construction activity is to commence, that states, "(Company name, address) is submitting an NOI letter to notify the Indiana Department of Environmental Management of our intent to comply with the requirements under 327 IAC 15-5 to discharge storm water from construction activities for the following project: (name of the construction project, address of the location of the construction project). Run-off from the project site will discharge to (stream(s) receiving the discharge(s)).".
(10) As applicable, a list of all MS4 areas designated under 327 IAC 15-13 within which the project site lies.

(11) A written certification by the operator that:

(A) the storm water quality measures included in the construction plan comply with the requirements under sections 6.5, 7, and 7.5 of this rule and that the storm water pollution prevention plan complies with all applicable federal, state, and local storm water requirements;

(B) the measures required by section 7 of this rule will be implemented in accordance with the storm water pollution prevention plan;

(C) if the projected land disturbance is one (1) acre or more, the applicable soil and water conservation district or other entity designated by the department has been sent a copy of the construction plan for review;

(D) storm water quality measures beyond those specified in the storm water pollution prevention plan will be implemented during the life of the permit if necessary to comply with section 7 of this rule; and

(E) implementation of storm water quality measures will be inspected by trained individuals.

(12) The name of receiving water or, if the discharge is to a municipal separate storm sewer, the name of the municipal operator of the storm sewer and the ultimate receiving water.

(13) The NOI letter must be signed by a person meeting the signatory requirements in 327 IAC 15-4-3(g).

(14) A notification from the SWCD, DNR-DSC, or other entity designated by the department as the reviewing agency indicating that the constructions plans are sufficient to comply with this rule. This requirement may be waived if the project site owner has not received notification from the reviewing agency within the time frame specified in 327 IAC 15-5-6(b)(3).

(b) Send NOI letters to:

Indiana Department of Environmental Management
Office of Water Quality, Urban Wet Weather Section
100 North Senate Avenue, Room N1255
Indianapolis, Indiana 46204
Attention: Rule 5 Storm Water Coordinator.

(Water Pollution Control Board; 327 IAC 15-5-5; filed Aug 31, 1992, 5:00 p.m.: 16 IR 24; errata filed Sep 10, 1992, 12:00 p.m.: 16 IR 65; readopted filed Jan 10, 2001, 3:23 p.m.: 24 IR 1518; filed Oct 27, 2003, 10:15 a.m.: 27 IR 836; errata filed Feb 6, 2006, 11:15 a.m.: 29 IR 1938; readopted filed Nov 21, 2007, 1:16 p.m.: 20071219-IR-327070553BFA)

327 IAC 15-5-6 Submittal of an NOI letter and construction plans

Authority: IC 13-14-8; IC 13-15-1-2; IC 13-15-2; IC 13-18-3; IC 13-18-4
Affected: IC 13-12-3-1; IC 13-18-1

Sec. 6. (a) After the project site owner has received notification from the reviewing agency that the construction plans meet the requirements of the rule or the review period outlined in subsection (b)(3) has expired, all NOI letter information required under section 5 of this rule shall be submitted to the commissioner at least forty-eight (48) hours prior to the initiation of land disturbing activities at the site. A copy of the completed NOI letter must also be submitted to all SWCDs, or other entity designated by the department, where the land disturbing activities are to occur. If the NOI letter is determined to be deficient, the project site owner must address the deficient items and submit an amended NOI letter to the commissioner at the address specified in section 5 of this rule.

(b) For a project site where the proposed land disturbance is one (1) acre or more as determined under section 2 of this rule, the following requirements must be met:

(1) A construction plan must be submitted according to the following:

(A) Prior to the initiation of any land disturbing activities.

(B) Sent to the appropriate SWCD or other entity designated by the department for:

(i) review and verification that the plan meets the requirements of the rule; or

(ii) a single coordinated review in accordance with subsection (d)(3) if:

(AA) the construction activity will occur in more than one (1) SWCD; and

(BB) the project site owner has made a request for a single coordinated review.

(2) If the construction plan required by subdivision (1) is determined to be deficient, the SWCD, DNR-DSC, or other entity designated by the department as the reviewing agency may require modifications, terms, and conditions as necessary to meet the requirements of the rule. The initiation of construction activity following notification by the reviewing agency that the plan does not meet the requirements of the rule is a violation and subject to enforcement action. If notification of a deficient plan

is received after the review period outlined in subdivision (3) and following commencement of construction activities, the plans must be modified to meet the requirements of the rule and resubmitted within fourteen (14) days of receipt of the notification of deficient plans.

(3) If the project site owner does not receive notification within twenty-eight (28) days after the plan is received by the reviewing agency stating that the reviewing agency finds the plan is deficient, the project site owner may submit the NOI letter information.

(c) The following apply for a project where construction activity occurs inside a single MS4 area regulated under 327 IAC 15-13:

(1) A copy of the completed NOI letter must be submitted to the appropriate MS4 operators.

(2) The project site owner must comply with all appropriate ordinances and regulations within the MS4 area related to storm water discharges. The MS4 operator ordinance as required by 327 IAC 15-13-15(b) and 327 IAC 15-13-16(b) will be considered to have the same authority as this rule within the regulated MS4 area.

(d) For a project that will occur in more than one (1) jurisdiction, such as an SWCD or regulated MS4 area, the following must be met:

(1) Project site owners of project sites occurring in multiple MS4 areas, but not in nondesignated areas, shall submit the information required in subsection (c) to each appropriate MS4 operator.

(2) Project site owners of project sites occurring in one (1) or more MS4 areas and nondesignated areas shall submit the information required in subsections (a) through (c) to all appropriate MS4 operators, and the SWCD or other entity designated by the department.

(3) Project site owners of project sites occurring in multiple nondesignated areas, but not occurring within an MS4 area, may request a single coordinated review through the DNR-DSC office at the following address:

402 West Washington Street
Room W265
Indianapolis, Indiana 46204.

Upon acceptance of the request, the DNR-DSC will coordinate the plan review with appropriate SWCDs and other entities designated by the department. *(Water Pollution Control Board; 327 IAC 15-5-6; filed Aug 31, 1992, 5:00 p.m.: 16 IR 24; readopted filed Jan 10, 2001, 3:23 p.m.: 24 IR 1518; filed Oct 27, 2003, 10:15 a.m.: 27 IR 837; errata filed Feb 4, 2004, 1:45 p.m.: 27 IR 2284; readopted filed Nov 21, 2007, 1:16 p.m.: 20071219-IR-327070553BFA)*

327 IAC 15-5-6.5 Requirements for construction plans

Authority: IC 13-14-8; IC 13-15-1-2; IC 13-15-2; IC 13-18-3; IC 13-18-4
Affected: IC 13-12-3-1; IC 13-18-1

Sec. 6.5. (a) For project sites that do not meet the criteria in subsection (b), the project site owner shall develop a set of construction plans. Storm water quality measures included in the plan must achieve the minimum project site requirements specified in section 7 of this rule. The construction plans must include the following:

(1) Project narrative and supporting documents, including the following information:

(A) An index indicating the location, in the construction plans, of all information required by this subsection.

(B) Description of the nature and purpose of the project.

(C) Legal description of the project site. The description should be to the nearest quarter section, township, and range, and include the civil township.

(D) Soil properties, characteristics, limitations, and hazards associated with the project site and the measures that will be integrated into the project to overcome or minimize adverse soil conditions.

(E) General construction sequence of how the project site will be built, including phases of construction.

(F) Hydrologic Unit Code (14 Digit) available from the United States Geological Survey (USGS).

(G) A reduced plat or project site map showing the lot numbers, lot boundaries, and road layout and names. The reduced map must be legible and submitted on a sheet or sheets no larger than eleven (11) inches by seventeen (17) inches for all phases or sections of the project site.

(H) Identification of any other state or federal water quality permits that are required for construction activities associated with the owner's project site.

(2) Vicinity map depicting the project site location in relationship to recognizable local landmarks, towns, and major roads,

such as a USGS topographic quadrangle map or county or municipal road map.

(3) An existing project site layout that must include the following information:

(A) Location and name of all wetlands, lakes, and water courses on or adjacent to the project site.

(B) Location of all existing structures on the project site.

(C) One hundred (100) year floodplains, floodway fringes, and floodways. Please note if none exists.

(D) Soil map of the predominant soil types, as determined by the United States Department of Agriculture (USDA), Natural Resources Conservation Service (NRCS) Soil Survey, or an equivalent publication, or as determined by a soil scientist. A soil legend must be included with the soil map.

(E) Identification and delineation of vegetative cover, such as grass, weeds, brush, and trees, on the project site.

(F) Land use of all adjacent properties.

(G) Existing topography at a contour interval appropriate to indicate drainage patterns.

(4) Final project site layout, including the following information:

(A) Location of all proposed site improvements, including roads, utilities, lot delineation and identification, proposed structures, and common areas.

(B) One hundred (100) year floodplains, floodway fringes, and floodways. Please note if none exists.

(C) Proposed final topography at a contour interval appropriate to indicate drainage patterns.

(5) A grading plan, including the following information:

(A) Delineation of all proposed land disturbing activities, including off-site activities that will provide services to the project site.

(B) Location of all soil stockpiles and borrow areas.

(C) Information regarding any off-site borrow, stockpile, or disposal areas that are associated with a project site and under the control of the project site owner.

(D) Existing and proposed topographic information.

(6) A drainage plan, including the following information:

(A) An estimate of the peak discharge, based on the ten (10) year storm event, of the project site for both preconstruction and postconstruction conditions.

(B) Location, size, and dimensions of all storm water drainage systems, such as culverts, storm sewers, and conveyance channels.

(C) Locations where storm water may be directly discharged into ground water, such as abandoned wells or sinkholes. Please note if none exists.

(D) Locations of specific points where storm water discharge will leave the project site.

(E) Name of all receiving waters. If the discharge is to a separate municipal storm sewer, identify the name of the municipal operator and the ultimate receiving water.

(F) Location, size, and dimensions of features, such as permanent retention or detention facilities, including existing or manmade wetlands, used for the purpose of storm water management.

(7) A storm water pollution prevention plan associated with construction activities. The plan must be designed to, at least, meet the requirements of sections 7 and 7.5 of this rule and must include the following:

(A) Location, dimensions, detailed specifications, and construction details of all temporary and permanent storm water quality measures.

(B) Temporary stabilization plans and sequence of implementation.

(C) Permanent stabilization plans and sequence of implementation.

(D) Temporary and permanent stabilization plans shall include the following:

(i) Specifications and application rates for soil amendments and seed mixtures.

(ii) The type and application rate for anchored mulch.

(E) Construction sequence describing the relationship between implementation of storm water quality measures and stages of construction activities.

(F) Self-monitoring program including plan and procedures.

(G) A description of potential pollutant sources associated with the construction activities, that may reasonably be expected to add a significant amount of pollutants to storm water discharges.

(H) Material handling and storage associated with construction activity shall meet the spill prevention and spill response requirements in 327 IAC 2-6.1.

(8) The postconstruction storm water pollution prevention plan. The plan must include the following information:

(A) A description of potential pollutant sources from the proposed land use, that may reasonably be expected to add a significant amount of pollutants to storm water discharges.

(B) Location, dimensions, detailed specifications, and construction details of all postconstruction storm water quality measures.

(C) A description of measures that will be installed to control pollutants in storm water discharges that will occur after construction activities have been completed. Such practices include infiltration of run-off, flow reduction by use of open vegetated swales and natural depressions, buffer strip and riparian zone preservation, filter strip creation, minimization of land disturbance and surface imperviousness, maximization of open space, and storm water retention and detention ponds.

(D) A sequence describing when each postconstruction storm water quality measure will be installed.

(E) Storm water quality measures that will remove or minimize pollutants from storm water run-off.

(F) Storm water quality measures that will be implemented to prevent or minimize adverse impacts to stream and riparian habitat.

(G) A narrative description of the maintenance guidelines for all postconstruction storm water quality measures to facilitate their proper long term function. This narrative description shall be made available to future parties who will assume responsibility for the operation and maintenance of the postconstruction storm water quality measures.

(b) For a single-family residential development consisting of four (4) or fewer lots or a single-family residential strip development where the developer offers for sale or lease without land improvements, and the project is not part of a larger common plan of development or sale, the project site owner shall develop a set of construction plans containing storm water quality measures that achieve the minimum project site requirements specified in section 7 of this rule. The construction plan must include the following:

(1) Project narrative and supporting documents, including the following information:

(A) An index indicating the location, in the construction plans, of all required items in this subsection.

(B) Description of the nature and purpose of the project.

(C) Legal description of the project site. The description should be to the nearest quarter section, township, and range, and include the civil township.

(D) Soil properties, characteristics, limitations, and hazards associated with the project site and the measures that will be integrated into the project to overcome or minimize adverse soil conditions.

(E) Hydrologic Unit Code (14 Digit) available from the United States Geological Survey (USGS).

(F) Identification of any other state or federal permits that are required for construction activities associated with the project site owner's project site.

(2) Vicinity map depicting the project site location in relationship to recognizable local landmarks, towns, and major roads, such as a USGS topographic quadrangle map or county or municipal road map.

(3) A project site layout that must include the following information:

(A) Location and name of all wetlands, lakes, and water courses on or adjacent to the project site.

(B) Location of all existing structures on the project site (if applicable).

(C) One hundred (100) year floodplains, floodway fringes, and floodways. Please note if none exists.

(D) Soil map of the predominant soil types, as determined by the United States Department of Agriculture (USDA), Natural Resources Conservation Service (NRCS) Soil Survey, or an equivalent publication, or as determined by a soil scientist. A soil legend must be included with the soil map.

(E) Identification and delineation of vegetative cover, such as grass, weeds, brush, and trees, on the project site.

(F) Land use of all adjacent properties.

(G) Existing and proposed topography at a contour interval appropriate to indicate drainage patterns.

(H) Location of all proposed site improvements, including roads, utilities, lot delineation and identification, and proposed structures.

(4) A storm water pollution prevention plan associated with construction activities. The plan must be designed to, at least, meet the requirements of sections 7 and 7.5 of this rule and must include the following:

(A) Delineation of all proposed land disturbing activities, including off-site activities that will provide services to the project site.

(B) Location of all soil stockpiles and borrow areas.

(C) Location, size, and dimensions of all storm water drainage systems, such as culverts, storm sewers, and conveyance channels.

(D) Locations where storm water may be directly discharged into ground water, such as abandoned wells or sinkholes. Please note if none exist.

(E) Locations of specific points where storm water discharge will leave the project site.

(F) Name of all receiving waters. If the discharge is to a separate municipal storm sewer, identify the name of the municipal operator and the ultimate receiving water.

(G) Location, dimensions, detailed specifications, and construction details of all temporary and permanent storm water quality measures.

(H) Temporary stabilization plans and sequence of implementation of storm water quality measures.

(I) Temporary and permanent stabilization plans shall include the following:

(i) Specifications and application rates for soil amendments and seed mixtures.

(ii) The type and application rate for anchored mulch.

(J) Self-monitoring program plan and procedures.

(c) The SWCD or the DNR-DSC representative or other designated entity may upon finding reasonable cause require modification to the construction plan if it is determined that changes are necessary due to site conditions or project design changes. Revised plans, if requested, must be submitted to the appropriate entity within twenty-one (21) calendar days of a request for a modification. *(Water Pollution Control Board; 327 IAC 15-5-6.5; filed Oct 27, 2003, 10:15 a.m.: 27 IR 838; errata filed Feb 4, 2004, 1:45 p.m.: 27 IR 2284; readopted filed Nov 21, 2007, 1:16 p.m.: 20071219-IR-327070553BFA)*

327 IAC 15-5-7 General requirements for storm water quality control

Authority: IC 13-14-8; IC 13-15-1-2; IC 13-15-2; IC 13-18-3; IC 13-18-4
Affected: IC 13-12-3-1; IC 13-18-1

Sec. 7. (a) All storm water quality measures and erosion and sediment controls necessary to comply with this rule must be implemented in accordance with the construction plan and sufficient to satisfy subsection (b).

(b) A project site owner shall, at least, meet the following requirements:

(1) Sediment-laden water which otherwise would flow from the project site shall be treated by erosion and sediment control measures appropriate to minimize sedimentation.

(2) Appropriate measures shall be implemented to minimize or eliminate wastes or unused building materials, including garbage, debris, cleaning wastes, wastewater, concrete truck washout, and other substances from being carried from a project site by run-off or wind. Identification of areas where concrete truck washout is permissible must be clearly posted at appropriate areas of the site. Wastes and unused building materials shall be managed and disposed of in accordance with all applicable statutes and regulations.

(3) A stable construction site access shall be provided at all points of construction traffic ingress and egress to the project site.

(4) Public or private roadways shall be kept cleared of accumulated sediment that is a result of run-off or tracking. Bulk clearing of sediment shall not include flushing the area with water. Cleared sediment shall be redistributed or disposed of in a manner that is in accordance with all applicable statutes and regulations.

(5) Storm water run-off leaving a project site must be discharged in a manner that is consistent with applicable state or federal law.

(6) The project site owner shall post a notice near the main entrance of the project site. For linear project sites, such as a pipeline or highway, the notice must be placed in a publicly accessible location near the project field office. The notice must be maintained in a legible condition and contain the following information:

(A) Copy of the completed NOI letter and the NPDES permit number, where applicable.

(B) Name, company name, telephone number, e-mail address (if available), and address of the project site owner or a local contact person.

(C) Location of the construction plan if the project site does not have an on-site location to store the plan.

(7) This permit and posting of the notice under subdivision (6) does not provide the public with any right to trespass on a project site for any reason, nor does it require that the project site owner allow members of the public access to the project site.

(8) The storm water pollution prevention plan shall serve as a guideline for storm water quality, but should not be interpreted to be the only basis for implementation of storm water quality measures for a project site. The project site owner is responsible

for implementing, in accordance with this rule, all measures necessary to adequately prevent polluted storm water run-off.
(9) The project site owner shall inform all general contractors, construction management firms, grading or excavating contractors, utility contractors, and the contractors that have primary oversight on individual building lots of the terms and conditions of this rule and the conditions and standards of the storm water pollution prevention plan and the schedule for proposed implementation.
(10) Phasing of construction activities shall be used, where possible, to minimize disturbance of large areas.
(11) Appropriate measures shall be planned and installed as part of an erosion and sediment control system.
(12) All storm water quality measures must be designed and installed under the guidance of a trained individual.
(13) Collected run-off leaving a project site must be either discharged directly into a well-defined, stable receiving channel or diffused and released to adjacent property without causing an erosion or pollutant problem to the adjacent property owner.
(14) Drainage channels and swales must be designed and adequately protected so that their final gradients and resultant velocities will not cause erosion in the receiving channel or at the outlet.
(15) Natural features, including wetlands and sinkholes, shall be protected from pollutants associated with storm water run-off.
(16) Unvegetated areas that are scheduled or likely to be left inactive for fifteen (15) days or more must be temporarily or permanently stabilized with measures appropriate for the season to minimize erosion potential. Alternative measures to site stabilization are acceptable if the project site owner or their representative can demonstrate they have implemented erosion and sediment control measures adequate to prevent sediment discharge. Vegetated areas with a density of less than seventy percent (70%) shall be restabilized using appropriate methods to minimize the erosion potential.
(17) During the period of construction activities, all storm water quality measures necessary to meet the requirements of this rule shall be maintained in working order.
(18) A self-monitoring program that includes the following must be implemented:
(A) A trained individual shall perform a written evaluation of the project site:
(i) by the end of the next business day following each measurable storm event; and
(ii) at a minimum of one (1) time per week.
(B) The evaluation must:
(i) address the maintenance of existing storm water quality measures to ensure they are functioning properly; and
(ii) identify additional measures necessary to remain in compliance with all applicable statutes and rules.
(C) Written evaluation reports must include:
(i) the name of the individual performing the evaluation;
(ii) the date of the evaluation;
(iii) problems identified at the project site; and
(iv) details of corrective actions recommended and completed.
(D) All evaluation reports for the project site must be made available to the inspecting authority within forty-eight (48) hours of a request.
(19) Proper storage and handling of materials, such as fuels or hazardous wastes, and spill prevention and clean-up measures shall be implemented to minimize the potential for pollutants to contaminate surface or ground water or degrade soil quality.
(20) Final stabilization of a project site is achieved when:
(A) all land disturbing activities have been completed and a uniform (for example, evenly distributed, without large bare areas) perennial vegetative cover with a density of seventy percent (70%) has been established on all unpaved areas and areas not covered by permanent structures, or equivalent permanent stabilization measures have been employed; and
(B) construction projects on land used for agricultural purposes are returned to its preconstruction agricultural use or disturbed areas, not previously used for agricultural production, such as filter strips and areas that are not being returned to their preconstruction agricultural use, meet the final stabilization requirements in clause (A).

(Water Pollution Control Board; 327 IAC 15-5-7; filed Aug 31, 1992, 5:00 p.m.: 16 IR 24; readopted filed Jan 10, 2001, 3:23 p.m.: 24 IR 1518; filed Oct 27, 2003, 10:15 a.m.: 27 IR 840; errata filed Feb 4, 2004, 1:45 p.m.: 27 IR 2284; readopted filed Nov 21, 2007, 1:16 p.m.: 20071219-IR-327070553BFA)

327 IAC 15-5-7.5 General requirements for individual building lots within a permitted project

Authority: IC 13-14-8; IC 13-15-1-2; IC 13-15-2; IC 13-18-3; IC 13-18-4
Affected: IC 13-12-3-1; IC 13-18-1

Sec. 7.5. (a) All storm water quality measures, including erosion and sediment control, necessary to comply with this rule must be implemented in accordance with the plan and sufficient to satisfy subsection (b).

(b) Provisions for erosion and sediment control on individual building lots regulated under the original permit of a project site owner must include the following requirements:

(1) The individual lot operator, whether owning the property or acting as the agent of the property owner, shall be responsible for erosion and sediment control requirements associated with activities on individual lots.

(2) Installation and maintenance of a stable construction site access.

(3) Installation and maintenance of appropriate perimeter erosion and sediment control measures prior to land disturbance.

(4) Sediment discharge and tracking from each lot must be minimized throughout the land disturbing activities on the lot until permanent stabilization has been achieved.

(5) Clean-up of sediment that is either tracked or washed onto roads. Bulk clearing of sediment shall not include flushing the area with water. Cleared sediment must be redistributed or disposed of in a manner that is in compliance with all applicable statutes and rules.

(6) Adjacent lots disturbed by an individual lot operator must be repaired and stabilized with temporary or permanent surface stabilization.

(7) For individual residential lots, final stabilization meeting the criteria in section 7(b)(20) of this rule will be achieved when the individual lot operator:

(A) completes final stabilization; or

(B) has installed appropriate erosion and sediment control measures for an individual lot prior to occupation of the home by the homeowner and has informed the homeowner of the requirement for, and benefits of, final stabilization.

(Water Pollution Control Board; 327 IAC 15-5-7.5; filed Oct 27, 2003, 10:15 a.m.: 27 IR 843; readopted filed Nov 21, 2007, 1:16 p.m.: 20071219-IR-327070553BFA)

327 IAC 15-5-8 Project termination

Authority: IC 13-14-8; IC 13-15-1-2; IC 13-15-2; IC 13-18-3; IC 13-18-4
Affected: IC 13-12-3-1; IC 13-18-1

Sec. 8. (a) The project site owner shall plan an orderly and timely termination of the construction activities, including the implementation of storm water quality measures that are to remain on the project site.

(b) The project site owner shall submit a notice of termination (NOT) letter to the commissioner and a copy to the appropriate SWCD or other designated entity in accordance with the following:

(1) Except as provided in subdivision (2), the project site owner shall submit an NOT letter when the following conditions have been met:

(A) All land disturbing activities, including construction on all building lots, have been completed and the entire site has been stabilized.

(B) All temporary erosion and sediment control measures have been removed.

The NOT letter must contain a verified statement that each of the conditions in this subdivision has been met.

(2) The project site owner may submit an NOT letter to obtain early release from compliance with this rule if the following conditions are met:

(A) The remaining, undeveloped acreage does not exceed five (5) acres, with contiguous areas not to exceed one (1) acre.

(B) A map of the project site, clearly identifying all remaining undeveloped lots, is attached to the NOT letter. The map must be accompanied by a list of names and addresses of individual lot owners or individual lot operators of all undeveloped lots.

(C) All public and common improvements, including infrastructure, have been completed and permanently stabilized and have been transferred to the appropriate local entity.

(D) The remaining acreage does not pose a significant threat to the integrity of the infrastructure, adjacent properties, or water quality.

(E) All permanent storm water quality measures have been implemented and are operational.

(c) Following acceptance of the NOT letter and written approval from the department for early release under subsection (b), the project site owner shall notify all current individual lot owners and all subsequent individual lot owners of the remaining

undeveloped acreage and acreage with construction activity that they are responsible for complying with section 7.5 of this rule. The remaining individual lot owners do not need to submit an NOI letter or NOT letter. The notice must contain a verified statement that each of the conditions in subsection (b)(2) have been met. The notice must also inform the individual lot owners of the requirements to:

(1) install and maintain appropriate measures to prevent sediment from leaving the individual building lot; and

(2) maintain all erosion and sediment control measures that are to remain on-site as part of the construction plan.

(d) The SWCD, DNR-DSC, other entity designated by the department or a regulated MS4 entity, or the department may inspect the project site to evaluate the adequacy of the remaining storm water quality measures and compliance with the NOT letter requirements. If the inspecting entity finds that the project site owner has sufficiently filed an NOT letter, the entity shall forward notification to the department. Upon receipt of the verified NOT letter by the department and receipt of written approval from the department, the project site owner shall no longer be responsible for compliance with this rule.

(e) After a verified NOT letter has been submitted for a project site, maintenance of the remaining storm water quality measures shall be the responsibility of the individual lot owner or occupier of the property. *(Water Pollution Control Board; 327 IAC 15-5-8; filed Aug 31, 1992, 5:00 p.m.: 16 IR 25; readopted filed Jan 10, 2001, 3:23 p.m.: 24 IR 1518; filed Oct 27, 2003, 10:15 a.m.: 27 IR 843; readopted filed Nov 21, 2007, 1:16 p.m.: 20071219-IR-327070553BFA)*

327 IAC 15-5-9 Standard conditions

Authority: IC 13-1-3-4; IC 13-1-3-7; IC 13-7-7; IC 13-7-10-1
Affected: IC 13-1-3; IC 13-7

Sec. 9. The standard conditions for NPDES general permit rules under 327 IAC 15-4 shall apply to this rule. *(Water Pollution Control Board; 327 IAC 15-5-9; filed Aug 31, 1992, 5:00 p.m.: 16 IR 26; readopted filed Jan 10, 2001, 3:23 p.m.: 24 IR 1518; readopted filed Nov 21, 2007, 1:16 p.m.: 20071219-IR-327070553BFA)*

327 IAC 15-5-10 Inspection and enforcement

Authority: IC 13-13-5-2; IC 13-15-1-2; IC 13-15-2-1; IC 13-18-3-1; IC 13-18-3-2; IC 13-18-3-3; IC 13-18-3-13; IC 13-18-4-1; IC 13-18-4-3
Affected: IC 13-14-10; IC 13-15-7; IC 13-18-3; IC 13-18-4; IC 13-30

Sec. 10. (a) The department or its designated representative may inspect any project site involved in construction activities regulated by this rule at reasonable times. The department or its designated representatives may make recommendations to the project site owner or their representative to install appropriate measures beyond those specified in the storm water pollution prevention plan to achieve compliance.

(b) All persons engaging in construction activities on a project site shall be responsible for complying with the storm water pollution prevention plan and the provisions of this rule.

(c) The department shall investigate potential violations of this rule to determine which person may be responsible for the violation. The department shall, if appropriate, consider public records of ownership, building permits issued by local units of government, and other relevant information, which may include site inspections, storm water pollution prevention plans, notices of intent, and other information related to the specific facts and circumstances of the potential violation. Any person causing or contributing to a violation of any provisions of this rule shall be subject to enforcement and penalty under IC 13-14-10, IC 13-15-7, and IC 13-30.

(d) If remaining storm water quality measures are not properly maintained by the person occupying or owning the property, the department may pursue enforcement against that person for correction of deficiencies under 327 IAC 15-1-4.

(e) Construction plans and supporting documentation associated with the quality assurance plan must be made available to the department or its designated representatives within forty-eight (48) hours of such a request. *(Water Pollution Control Board; 327 IAC 15-5-10; filed Aug 31, 1992, 5:00 p.m.: 16 IR 26; filed Mar 23, 2000, 4:15 p.m.: 23 IR 1912; readopted filed Jan 10, 2001, 3:23 p.m.: 24 IR 1518; filed Oct 27, 2003, 10:15 a.m.: 27 IR 844; readopted filed Nov 21, 2007, 1:16 p.m.: 20071219-IR-327070553BFA)*

327 IAC 15-5-11 Notification of completion (Repealed)

Sec. 11. *(Repealed by Water Pollution Control Board; filed Oct 27, 2003, 10:15 a.m.: 27 IR 863)*

327 IAC 15-5-12 Duration of coverage

Authority: IC 13-14-8; IC 13-15-1-2; IC 13-15-2; IC 13-18-3; IC 13-18-4
Affected: IC 13-12-3-1; IC 13-18-1

Sec. 12. (a) A permit issued under this rule is granted by the commissioner for a period of five (5) years from the date coverage commences.

(b) Once the five (5) year permit term duration is reached, a general permit issued under this rule will be considered expired, and, as necessary for construction activity continuation, a new NOI letter would need to be submitted in accordance with subsection (c).

(c) To obtain renewal of coverage under this rule, the information required under sections 5 and 6 of this rule must be submitted to the commissioner ninety (90) days prior to the termination of coverage under this NPDES general permit rule, unless the commissioner determines that a later date is acceptable. Coverage under renewal NOI letters will begin on the date of expiration from the previous five (5) year permit term. *(Water Pollution Control Board; 327 IAC 15-5-12; filed Oct 27, 2003, 10:15 a.m.: 27 IR 844; readopted filed Nov 21, 2007, 1:16 p.m.: 20071219-IR-327070553BFA)*

Rule 6. Storm Water Discharges Exposed to Industrial Activity

327 IAC 15-6-1 Purpose

Authority: IC 13-14-8; IC 13-15-1-2; IC 13-15-2; IC 13-18-3; IC 13-18-4
Affected: IC 13-12-3-1; IC 13-18-1

Sec. 1. The purpose of this rule is to establish requirements for storm water discharges exposed to industrial activity that are composed entirely of storm water and allowable nonstorm water so that the public health, existing water uses, and aquatic biota are protected. *(Water Pollution Control Board; 327 IAC 15-6-1; filed Aug 31, 1992, 5:00 p.m.: 16 IR 26; readopted filed Jan 10, 2001, 3:23 p.m.: 24 IR 1518; filed Oct 27, 2003, 10:15 a.m.: 27 IR 845; readopted filed Nov 21, 2007, 1:16 p.m.: 20071219-IR-327070553BFA)*

327 IAC 15-6-2 Applicability of the general permit rule for storm water discharges exposed to industrial activity

Authority: IC 13-14-8; IC 13-15-1-2; IC 13-15-2; IC 13-18-3; IC 13-18-4
Affected: IC 4-21.5; IC 13-12-3-1; IC 13-18-1

Sec. 2. (a) Except as provided in subsections (c) through (j), the requirements under this rule apply to all facilities that meet the following requirements:

(1) Are not prohibited from regulation under a NPDES general permit rule under 327 IAC 15-2-6.

(2) Meet the NPDES general permit rule applicability requirements under 327 IAC 15-2-3.

(3) Have not received a conditional no exposure exclusion from storm water permitting under section 12 of this rule.

(4) Have a new or existing point source discharge composed entirely of storm water and the following allowable nonstorm water discharges exposed to industrial activity:

(A) Discharges from firefighting activities.

(B) Fire hydrant flushings.

(C) Potable water sources, including waterline flushings.

(D) Irrigation drainage.

(E) Landscape watering provided all pesticides, herbicides, and fertilizer have been applied in accordance with manufacturer's instructions.

(F) Routine external building washdown that does not use detergents.

(G) Pavement washwaters where spills or leaks of toxic or hazardous materials have not occurred, unless all spilled material has been removed, and where detergents are not used.

(H) Uncontaminated ground water or spring water.

(I) Foundation or footing drains where flows are not contaminated with process materials, such as solvents.

(J) Uncontaminated air conditioning or compressor condensate.

(K) Incidental windblown mist from cooling towers that collects on rooftops or adjacent portions of the facility, but not

SITE DEVELOPMENT/STORMWATER MANAGEMENT PERMIT APPLICATION

Lawson-Fisher Associates P.C.

Town of Griffith, Indiana

Site Development/Stormwater Management Permit Application
Erosion and Sediment Control

(TO COMPLY WITH EROSION AND SEDIMENT CONTROL ORDINANCE NO. 2008-01 AS AMENDED)

Co. Name: _____ Contact Person: _____

Address: _____ 24 Hr Emergency #: _____

_____ E-mail: _____

Phone: _____ Fax: _____

☐ Submittal Date _____ ☐ Town Approval Date _____

Project Description: _____

Project Location: _____

Total Disturbed Area*: _____

Anticipated Start Date of Excavation: _____ Completion Date: _____

☐ Owner/Developer has submitted three copies of the Erosion and Sediment Control Plan to the Town.

☐ Owner/Developer has paid the $150.00 filing fee to the Town.

I understand that in order to comply with Erosion and Sediment Control Ordinance No. 2008-01, I agree to install erosion control measures and to maintain the site while under construction, after any rain event, and until site is fully stabilized after construction is complete and released by the Town. Any land clearing, construction or development involving the movement of earth by any party on the project site shall be in accordance with the approved Erosion and Sediment Control Plan. If current measures are not effective, I shall be proactive and consult the Town of Griffith for direction.

Printed Name: _____ Signature: _____

*As defined by 327 IAC 15-5-4 to include any manmade change of the land surface. This includes removing vegetative cover that exposes underlying soil, excavating, filling, transporting, and grading.

Town of Griffith – Department of Public Works, 111 North Broad Street, Griffith, Indiana 46319

TOWN OF GRIFFITH, INDIANA

SITE DEVELOPMENT/STORMWATER MANAGEMENT PERMIT APPLICATION CHECKLIST

1.	**Notice of Intent**	
	Completed Notice of Intent – State Form #47487	
2.	**Construction Plans**	
	Project narrative and supporting documents, including the following information:	
		An index indicating the location, in the construction plans, of all information required by this subsection.
		Description of the nature and purpose of the project.
		Legal description of the project site with Quarter Section, Township, Range and Civil Township.
		Soil properties, characteristics, limitations, and hazards associated with the project site and the measures that will be integrated into the project to overcome or minimize adverse soil conditions.
		General construction sequence of how the project site will be built, including phases of construction.
		14-Digit Watershed Hydrologic Unit Code.
		A reduced plat or project site map showing the lot numbers, lot boundaries, easements, and road layout and names. The reduced map must be legible and submitted on a sheet or sheets no larger than eleven (11) inches by seventeen (17) inches for all phases or sections of the project site.
		Identification of any other state or federal water quality permits that are required for construction activities associated with the owner's project site.
	Vicinity map depicting the project site location in relationship to recognizable local landmarks, towns, and major roads, such as a USGS topographic quadrangle map, or county or municipal road map.	
	An existing project site layout that must include the following information:	
		Location, name, and normal water level of all wetlands, lakes, ponds, and water courses on, or adjacent to, the project site.
		Location of all existing structures on the project site.
		One hundred (100) year floodplains, floodway fringes, and floodways. Please note if none exists.
		Soil map of the predominant soil types, as determined by the United States Department of Agriculture (USDA), Natural Resources Conservation Service (NRCS) Soil Survey, or as determined by a soil scientist.
		A soil legend must be included with the soil map.
		Identification and delineation of vegetative cover such as grass, weeds, brush and trees on the project site.
		Location of storm, sanitary, combined sewer, and septic tank systems and outfalls.
		Land use of all adjacent properties.
		Existing topography at a contour interval appropriate to indicate drainage patterns.
	Final project site layout, including the following information:	
		Location of all proposed site improvements, including roads, utilities, lot delineation and identification, proposed structures, and common areas.
		One hundred (100) year floodplains, floodway fringes, and floodways. Please note if none exists.
		Proposed final topography, at a contour interval appropriate to indicate drainage patterns.
	A grading plan, including the following information:	
		Delineation of all proposed land disturbing activities, including off-site activities that will provide services to the project site.
		Location of all soil stockpiles and borrow areas.
		Information regarding any off-site borrow, stockpile, or disposal areas that are associated with a project site, and under the control of the project site owner.
		Existing and proposed topographic information.

TOWN OF GRIFFITH, INDIANA

SITE DEVELOPMENT/STORMWATER MANAGEMENT PERMIT APPLICATION CHECKLIST

	A drainage plan, including the following information:	
		An estimate of the peak discharge, based on the ten (10) year storm event, of the project site for both pre-construction and post-construction conditions.
		The proposed 100-year release rates determined for the site, showing the methodology used to calculate them and detailing considerations given to downstream restrictions (if any) that may affect the calculated allowable release rates.
		Calculation showing peak runoff rate after development for the 100-year return period 24-hour storms do not exceed the respective allowable release runoff rates.
		Location, size, and dimensions of all existing streams to be maintained, and new drainage systems such as culverts, bridges, storm sewers, conveyance channels, and 100-year overflow paths/ponding areas shown as hatched areas, along with the associated easements.
		Locations where stormwater may be directly discharged into groundwater, such as abandoned wells or sinkholes. Please note if none exists.
		Locations of specific points where stormwater discharge will leave the project site.
		Name of all receiving waters. If the discharge is to a separate municipal storm sewer, identify the name of the municipal operator and the ultimate receiving water.
		Location, size, and dimensions of features such as permanent retention or detention facilities, including existing or manmade wetlands, used for the purpose of stormwater management. Include existing retention or detention facilities that will be maintained, enlarged, or otherwise altered and new ponds or basins to be built and the basis of their design.
		The estimated depth and amount of storage required by design of the new ponds or basins.
		One or more typical cross sections of all existing and proposed channels or other open drainage facilities carried to a point above the 100-year high water and showing the elevation of the existing land and the proposed changes, together with the high water elevations expected from the 100-year storm under the controlled conditions called for by this ordinance, and the relationship of structures, streets, and other facilities.
3.	**Stormwater Drainage Technical Report**	
	A summary report, including the following information:	
		The significant drainage problems associated with the project.
		The analysis procedure used to evaluate these problems and to propose solutions.
		Any assumptions or special conditions associated with the use of these procedures, especially the hydrologic or hydraulic methods.
		The proposed design of the drainage control system.
		The results of the analysis of the proposed drainage control system showing that it does solve the project's drainage problems. Any hydrologic or hydraulic calculations or modeling results must be adequately cited and described in the summary description. If hydrologic or hydraulic modes are used, the input and output files for all necessary runs must be included in the appendices. A map showing any drainage area subdivisions used in the analysis must accompany the report.
	A Hydrologic/Hydraulic Analysis, consistent with the methodologies and calculation included in the Town of Griffith Technical Standards Manual and including the following information:	
		A hydraulic report detailing existing and proposed drainage patterns on the subject site. The report should include a description of present land use and proposed land use. Any off-site drainage entering the site should be addressed as well. This report should be comprehensive and detail all of the steps the engineer took during the design process.
		All hydrologic and hydraulic computations should be included in the submittal. These calculations should include, but are not limited to: runoff curve numbers and runoff coefficients, runoff calculations, stage-discharge relationships, times-of-concentration and storage volumes.

		Copies of all computer runs. These computer runs should include both the input and the outputs. Electronic copies of the computer runs with input files will expedite the review process and is required to be submitted.
		A set of exhibits should be included showing the drainage sub-areas and a schematic detailing of how the computer models were set up.
		A conclusion which summarizes the hydraulic design and details how this design satisfies this Ordinance.
		Signed and certified (stamped) by a Registered Professional Engineer in the State of Indiana.
4.	**Stormwater Pollution Prevention Plan for Construction Sites**	
	Location, dimensions, detailed specifications, and construction details of all temporary and permanent stormwater quality measures.	
	Temporary stabilization plans and sequence of implementation.	
	Permanent stabilization plans and sequence of implementation.	
	Temporary and permanent stabilization plans shall include the following:	
		Specifications and application rates for soil amendments and seed mixtures.
		The type and application rate for anchored mulch.
	Construction sequence describing the relationship between implementation of stormwater quality measures and stages of construction activities.	
	A typical erosion and sediment control plan for individual lot development.	
	Self-monitoring program including plan and procedures.	
	A description of potential pollutant sources associated with the construction activities, which may reasonably be expected to add a significant amount of pollutants to stormwater discharges.	
	Material handling and storage associated with construction activity shall meet the spill prevention and spill response requirements in 327 IAC 2-6.1.	
	Name, address, telephone number, and list of qualifications of the trained individual in charge of the mandatory stormwater pollution prevention self-monitoring program for the project site.	
5.	**Post-Construction Stormwater Pollution Prevention Plan**	
	A description of potential pollutant sources from the proposed land use, which may reasonably be expected to add a significant amount of pollutants to stormwater discharges.	
	Location, dimensions, detailed specifications, and construction details of all post-construction stormwater quality measures.	
	A description of measures that will be installed to control pollutants in stormwater discharges that will occur after construction activities have been completed. Such practices include infiltration of run-off, flow reduction by use of open vegetated swales and natural depressions, buffer strip and riparian zone preservation, filter strip creation, minimization of land disturbance and surface imperviousness, maximization of open space, and stormwater retention and detention ponds.	
	A sequence describing when each post-construction stormwater quality measure will be installed.	
	Stormwater quality measures that will remove or minimize pollutants from stormwater run-off.	
	Stormwater quality measures that will be implemented to prevent or minimize adverse impacts to stream and riparian habitat.	
	A narrative description of the maintenance guidelines for all post-construction stormwater quality measures to facilitate their proper long term function. This narrative description shall be made available to future parties who will assume responsibility for the operation and maintenance of the post-construction stormwater quality measures.	

APPENDIX D

TOWN OF GRIFFITH
STORMWATER TECHNICAL STANDARDS MANUAL

Lawson-Fisher Associates P.C.

STORMWATER TECHNICAL STANDARDS MANUAL

TOWN OF GRIFFITH, INDIANA

SEPTEMBER, 2010

TABLE OF CONTENTS

Chapter	*Title*
1	**INTRODUCTION**
2	**METHODOLOGY FOR DETERMINATION OF RUNOFF RATES**
3	**METHODOLOGY FOR DETERMINATION OF DETENTION STORAGE VOLUMES**
4	**STORM SEWER DESIGN STANDARDS AND SPECIFICATIONS**
5	**OPEN CHANNEL DESIGN STANDARDS AND SPECIFICATIONS**
6	**STORMWATER DETENTION DESIGN STANDARDS**
7	**EROSION CONTROL PRACTICES AND CONSTRUCTION PHASE BMPS**
8	**POST-CONSTRUCTION STORMWATER QUALITY BMPS**
9	**METHODOLOGY FOR DETERMINATION OF REQUIRED SIZING OF BMPS**

APPENDIX A : ABBREVIATIONS AND DEFINITIONS
APPENDIX B : STANDARD FORMS
APPENDIX C: CONSTRUCTION BMP FACT SHEETS
APPENDIX D: POST-CONSTRUCTION BMP FACT SHEETS

Chapter One

INTRODUCTION

This document, the Town of Griffith Stormwater Technical Standards Manual, contains the necessary technical standards for administering the requirements of 327 IAC 15-13 and the Town of Griffith Stormwater Management Ordinance. This document should be considered as a companion document to the Ordinance. Whereas the Ordinance contains the majority of the regulatory authority and general requirements of comprehensive stormwater management, this document contains the necessary means and methods for achieving compliance with the Ordinance. It is not intended as a regulatory document, but rather guidance to assist plan reviewers, developers, and designers. In case there are conflicts between the requirements contained in this document and the Ordinance, the requirements of the Ordinance shall prevail. In addition to the stormwater standards provided in this document, the Town of Griffith may have adopted, or may adopt in the future, separate other technical standards regarding various aspects of stormwater conveyance systems that for various reasons may not have been incorporated in this Technical Standards document. In case there are conflicts between the requirements contained in this document and the noted standards, the most restrictive requirements shall prevail.

This document contains formulas and methodologies for the review and design of both stormwater quantity and stormwater quality facilities. Chapters 2 through 6 contain stormwater conveyance and detention calculations and requirements. Chapter 7 contains information on erosion control requirements and other pollution prevention measures for active construction sites. Chapters 8 through 9 cover calculations required to properly size and design stormwater quality features that will treat runoff long-term following construction completion. A comprehensive glossary of terms is provided in Appendix A. Appendix B contains several useful and necessary standard forms. Best Management Practices (BMPs) for erosion control measures during the construction phase and for post-construction erosion and sediment control measures can be found in the Indiana Stormwater Quality Manual published in October, 2007, as amended, as well as in Appendices C and D.

Chapter Two

METHODOLOGY FOR DETERMINATION OF RUNOFF RATES

Runoff rates shall be computed for the area of the parcel under development plus the area of the watershed flowing into the parcel under development. The rate of runoff which is generated as the result of a given rainfall intensity may be calculated as follows:

A. Development Sites Less than or Equal to 5 Acres in Size, With a Contributing Drainage Area Less than or Equal to 50 Acres and No Depressional Storage

The Rational Method may be used. A computer model, such as TR-55 (NRCS), TR-20 (NRCS), HEC-HMS (COE), and HEC-1 (COE), that can generate hydrographs based on the NRCS TR-55 time of concentration and curve number calculation methodologies may also be used along with a 24-hour duration NRCS Type 2 storm. In the Rational Method, the peak rate of runoff, Q, in cubic feet per second (cfs) is computed as:

$$Q = CIA$$

Where: C = Runoff coefficient, representing the characteristics of the drainage area and defined as the ratio of runoff to rainfall.

I = Average intensity of rainfall in inches per hour for a duration equal to the time of concentration (t_c) for a selected rainfall frequency.

A = Tributary drainage area in acres.

Values for the runoff coefficient "C" are provided in **Tables 2-1** and **2-2**, which show values for different types of surfaces and local soil characteristics. The composite "C" value used for a given drainage area with various surface types shall be the weighted average value for the total area calculated from a breakdown of individual areas having different surface types. **Table 2-3** provides runoff coefficients and inlet times for different land use classifications.

Rainfall intensity shall be determined from the rainfall frequency data shown in **Table 2-4**.

In general, the time of concentration (t_c) methodology to be used for all stormwater management projects within the Town of Griffith shall be as outlined in the U.S. Department of Agriculture (USDA) - NRCS TR-55 Manual. In urban or developed areas, the methodology to be used shall be the sum of the inlet time and flow time in the stormwater facility from the most remote part of the drainage area to the point under consideration. The flow time in the storm sewers may be estimated by the distance in feet divided by velocity of flow in feet per second. The velocity shall be determined by the Manning's Equation (see Chapter 4). Inlet time is the combined time required for the runoff to reach the inlet of the storm sewer. It includes overland flow time and flow time through established surface drainage channels such as swales, ditches, and sheet flow across such areas as lawns, fields, and other graded surfaces.

TABLE 2-1

Urban Runoff Coefficients	
Type of Surface	*Runoff Coefficient "C"*
◆ **Hard Surfaces**	
Asphalt	0.82
Concrete	0.85
Roof	0.85
◆ **Lawns** (Sandy)	
Flat (0-2% Slope)	0.07
Rolling (2-7% Slope)	0.12
Steep (Greater than 7% Slope)	0.17
◆ **Lawns** (Clay)	
Flat (0-2% Slope)	0.16
Rolling (2-7% Slope)	0.21
Steep (Greater than 7% Slope)	0.30

Source: HERPICC Stormwater Drainage Manual, July 1995.

TABLE 2-2

Rural Runoff Coefficients	
Type of Surface	*Runoff Coefficient "C"*
◆ **Woodland** (Sandy)	
Flat (0-5% Slope)	0.10
Rolling (5-10% Slope)	0.25
Steep (Greater than 10% Slope)	0.30
◆ **Woodland** (Clay)	
Flat (0-5% Slope)	0.30
Rolling (5-10% Slope)	0.35
Steep (Greater than 10% Slope)	0.50
◆ **Pasture** (Sandy)	
Flat (0-5% Slope)	0.10
Rolling (5-10% Slope)	0.16
Steep (Greater than 10% Slope)	0.22
◆ **Pasture** (Clay)	
Flat (0-5% Slope)	0.30
Rolling (5-10% Slope)	0.36
Steep (Greater than 10% Slope)	0.42
◆ **Cultivated** (Sandy)	
Flat (0-5% Slope)	0.30
Rolling (5-10% Slope)	0.40
Steep (Greater than 10% Slope)	0.52
◆ **Cultivated** (Clay)	
Flat (0-5% Slope)	0.50
Rolling (5-10% Slope)	0.60
Steep (Greater than 10% Slope)	0.72

Source: HERPICC Stormwater Drainage Manual, July 1995.

TABLE 2-3

Runoff Coefficients "C" by Land Use and Typical Inlet Times				
Land Use	*Runoff Coefficients*			*Inlet Times (Minutes)* **(4)**
	Flat **(1)**	Rolling **(2)**	Steep **(3)**	
Commercial *(CBD)*	0.75	0.83	0.91	5
Commercial *(Neighborhood)*	0.54	0.60	0.66	5-10
Industrial	0.63	0.70	0.77	
Garden Apartments	0.54	0.60	0.66	
Churches	0.54	0.60	0.66	
Schools	0.31	0.35	0.39	10-15
Semi Detached Residential	0.45	0.50	0.55	
Detached Residential	0.40	0.45	0.50	
Quarter Acre Lots	0.36	0.40	0.44	
Half Acre Lots	0.31	0.35	0.39	
Parkland	0.18	0.20	0.22	To be Computed

Source: HERPICC Stormwater Drainage Manual, July 1995.

(1) Flat terrain involves slopes of 0-2%.
(2) Rolling terrain involves slopes of 2-7%.
(3) Steep terrain involves slopes greater than 7%.
(4) Interpolation, extrapolation and adjustment for local conditions shall be based on engineering experience and judgment.

B. Development Sites Greater Than 5 Acres in Size or Contributing Drainage Area Greater than 50 Acres or With Significant Depressional Storage

The runoff rate for these development sites and contributing drainage areas shall be determined by a computer model that can generate hydrographs based on the NRCS TR-55 time of concentration and curve number calculation methodologies and the 24-hour NRCS Type 2 Rainfall Distribution. 24-hour Rainfall depth for various frequencies shall be taken from **Table 2-5**. The NRCS Type 2 distribution ordinates are found in **Table 2-6**. Examples of computer models that can generate such hydrographs include TR-55 (NRCS), TR-20 (NRCS), HEC-HMS (COE), and HEC-1 (COE). These programs may be downloaded free of charge from the associated agencies' web sites. Other models may be acceptable and should be accepted by the Town of Griffith prior to their utilization.

TABLE 2-4

Rainfall Intensities for Various Return Periods and Storm Durations						
Intensity (Inches/Hour)						
Duration	*Return Period (Years)*					
	2	5	10	25	50	100
5 Min.	5.04	8.24	7.08	8.16	9.00	9.84
10 Min.	3.84	4.74	5.46	6.24	6.90	7.50
15 Min.	3.20	3.96	4.52	5.16	5.72	6.20
20 Min.	2.85	3.51	4.02	4.59	5.10	5.55
30 Min.	2.22	2.74	3.12	3.58	3.96	4.32
40 Min.	1.85	2.28	2.61	2.99	3.30	3.60
50 Min.	1.60	1.97	2.24	2.57	2.83	3.10
1 Hr.	1.40	1.73	1.97	2.25	2.49	2.72
1.5 Hrs.	1.13	1.39	1.59	1.82	2.02	2.20
2 Hrs.	0.86	1.06	1.21	1.38	1.53	1.67
3 Hrs.	0.61	0.76	0.87	0.99	1.10	1.20
4 Hrs.	0.52	0.64	0.73	0.83	0.92	1.00
5 Hrs.	0.43	0.53	0.61	0.70	0.77	0.84
6 Hrs.	0.37	0.46	0.52	0.60	0.66	0.72
7 Hrs.	0.33	0.41	0.47	0.53	0.59	0.64
8 Hrs.	0.29	0.36	0.42	0.47	0.53	0.57
9 Hrs.	0.27	0.33	0.38	0.43	0.48	0.52
10 Hrs.	0.25	0.31	0.35	0.40	0.44	0.48
12 Hrs.	0.22	0.27	0.30	0.35	0.38	0.42
14 Hrs.	0.19	0.24	0.27	0.31	0.34	0.37
16 Hrs.	0.17	0.21	0.24	0.28	0.31	0.34
18 Hrs.	0.16	0.19	0.22	0.25	0.28	0.31
20 Hrs.	0.14	0.18	0.20	0.23	0.26	0.28
24 Hrs.	0.13	0.15	0.18	0.20	0.22	0.24

TABLE 2-5

Rainfall Depths for Various Return Periods						
Depth (Inches)						
Duration	*Return Period (Years)*					
	2	5	10	25	50	100
24 Hrs.	3.00	3.70	4.23	4.83	5.35	5.83

TABLE 2-6

NRCS Type II Rainfall Distribution Ordinates	
Cumulative Percent of Storm Time	*Cumulative Percent of Storm Depth*
0	0
5	1
10	3
15	4
20	6
25	8
30	10
35	13
40	17
45	22
50	64
55	78
60	84
65	87
70	90
75	92
80	94
85	96
90	98
95	99
100	100

C. Development Sites with Drainage Areas Greater than or Equal to One Square Mile

For the design of any major drainage system, as defined in **Appendix A**, the discharge must be obtained from, or be accepted by, the IDNR. Other portions of the site must use the discharge methodology in the applicable section of this Article.

D. No Net Loss Floodplain Storage Policy

Floodplains exist adjacent to all natural and constructed streams, regardless of contributing drainage area or whether they have been previously identified or mapped. Due to potential impacts of floodplain loss on peak flows in streams and on the environment, disturbance to floodplains should be avoided. When the avoidance of floodplain disturbance is not practical, the natural functions of floodplain should be preserved to the maximum extent possible.

Compensatory excavation 1.5 times the floodplain storage lost shall be required for all activities within floodplain of streams located in the Town of Griffith where drainage area of the stream is equal or larger than one square mile. This requirement shall be considered to be above and beyond the minimum requirements provided in the applicable flood hazard areas ordinance currently in effect in the Town. The Town of Griffith may alter the compensation ratio, based on extenuating circumstances, for a specific project, for specific written reasons.

Compensatory storage is required when a portion of the floodplain is filled, occupied by a structure, or when as a result of a project a change in the channel hydraulics occurs that reduces the existing available floodplain storage. The compensatory storage should be located adjacent or opposite the placement of the fill and maintain an unimpeded connection to an adjoining floodplain area.

Chapter Three

METHODOLOGY FOR DETERMINATION OF DETENTION STORAGE VOLUMES

A. Development Sites Less than or Equal to 5 Acres in Size, With a Contributing Drainage Area Less than or Equal to 50 Acres and No Depressional Storage

The required volume of stormwater storage may be calculated using the Rational Method and based on the runoff from a 100-year return period storm. A computer model, such as TR-55 (NRCS), TR-20 (NRCS), HEC-HMS (COE), and HEC-1 (COE), that can generate hydrographs based on the NRCS TR-55 time of concentration and curve number calculation methodologies may also be used along with a 24-hour duration NRCS Type 2 storm.

The following 8-step procedure, based on the Rational Method, may be used to determine the required volume of storage

Step	Procedure
1.	Determine total drainage area in acres "A".
2.	Determine the parcel area tributary to each outlet and determine the post-development 100-year release runoff rate (Q_u) based on general release rates provided in Chapter 6 of these Technical Standards document.
3	Determine composite runoff coefficient "C_d" based on developed conditions and a 100-year return period.
4.	Determine 100-year return rainfall intensity "I_d" for various storm durations "t_d" up through the time of concentration for the developed area using **Table 2-4**.
5.	Determine developed inflow rates "Q_d" for various storm durations "t_d", measured in hours.

$$Q_d = (C_d)(I_d)(A_d)$$

6. Compute a storage rate "$S(t_d)$" for various storm durations "t_d" up through the time of concentration of the developed area.

$$S(t_d) = (Q_d) - (Q_u)$$

7. Compute required storage volume "S_R" in acre-feet for each storm duration "t_d". This assumes a triangular hydrograph of duration ($2t_d$) hours with a peak flow of $S(t_d)$ at t_d hours.

$$S_R = S(t_d)t\left(\frac{d}{12}\right)$$

8. Select largest storage volume computed in Step 7 for any storm duration "t_d" for detention basin design.

B. Development Sites Greater Than 5 Acres in Size or Contributing Drainage Area Greater than 50 Acres or With Significant Depressional Storage

All runoff detention storage calculations for these development sites shall be prepared using a computer model that can generate hydrographs based on the NRCS TR-55 time of concentration and curve number calculation methodologies. The 24-hour NRCS Type 2 Rainfall Distribution shall be utilized to determine the required storage volume. The allowable release rates shall be determined based on the methodologies provided in Chapter 6 of these Technical Standards document. Examples of computer models that can generate such hydrographs include TR-55 (NRCS), TR-20 (NRCS), HEC-HMS (COE), and HEC-1 (COE). These programs may be downloaded free of charge from the associated agencies' web sites. Other models may be acceptable and should be accepted by the Town of Griffith prior to their utilization.

Chapter Four

STORM SEWER DESIGN STANDARDS AND SPECIFICATIONS

All storm sewers, whether private or public, and whether constructed on private or public property shall conform to the design standards and other requirements contained herein.

A. Design Storm Frequencies

1. All storm sewers, inlets, catch basins, and street gutters shall accommodate (subject to the "allowable spread" provisions discussed later in this Section), as a minimum, peak runoff from a 24-hour, 10-year return frequency storm calculated based on methodology described in Chapter 2. Additional discharges to storm sewer systems allowed in Section L below of this Section must be considered in all design calculations. For Rational Method analysis, the duration shall be equal to the time of concentration for the drainage area. In computer based analysis, the duration is as noted in the applicable methodology associated with the computer program.

2. Culverts shall be capable of accommodating peak runoff from a 24-hour, 50-year frequency storm when crossing under a road which is part of the INDOT Rural Functional Classification System or is classified as freeway, arterial, and/or collectors by the Town of Griffith Zoning Ordinance or provides the only access to and from any portion of any commercial or residential developments.

3. For portions of the system considered minor drainage systems, the allowable spread of water on Collector Streets is limited to maintaining two clear 10-foot moving lanes of traffic. One lane is to be maintained on Local Roads, while other access lanes (such as a subdivision cul-de-sac) can have a water spread equal to one-half of their total width. An overflow channel/swale between sag inlets and overflow paths or basin shall be provided at sag inlets so that the maximum depth of water that might be ponded in the street sag shall not exceed 7 inches measured from elevation of gutter.

4. Facilities functioning as a major drainage system as defined in **Appendix A** must also meet IDNR design standards.

B. Manning's Equation

Determination of hydraulic capacity for storm sewers sized by the

Rational Method analysis must be done using Manning's Equation. where:

$$V = (1.486/n)(R^{2/3})(S^{1/2})$$

Then:

$$Q=(V)(A)$$

Where:

Q = capacity in cubic feet per second

V = mean velocity of flow in feet per second

A = cross sectional area in square feet

R = hydraulic radius in feet

S = slope of the energy grade line in feet per foot

n = Manning's "n" or roughness coefficient

The hydraulic radius, R, is defined as the cross sectional area of flow divided by the wetted flow surface or wetted perimeter. Allowable "n" values and maximum permissible velocities for storm sewer materials are listed in **Table 4-1**.

C. Backwater Method for Pipe System Analysis

For hydraulic analysis of existing or proposed storm drains which possess submerged outfalls, a more sophisticated design/analysis methodology than Manning's equation will be required. The backwater analysis method provides a more accurate estimate of pipe flow by calculating individual head losses in pipe systems that are surcharged and/or have submerged outlets. These head losses are added to a known downstream water surface elevation to give a design water surface elevation for a given flow at the desired upstream location. Total head losses may be determined as follows:

Total head loss = frictional loss + manhole loss + velocity head loss + junction loss

TABLE 4-1

Typical Values of Manning's "n"		
Material	*Manning's "n"*	*Maximum Velocities (feet/second)*
◆ **Closed Conduits**		
Concrete	0.013	10
Vitrified Clay	0.013	10
HDPE	0.012	10
PVC	0.011	10
◆ **Circular CMP, Annular Corrugations, 2 2/3 x ½ inch**		
Unpaved	0.024	7
25% Paved	0.021	7
50% Paved	0.018	7
100% Paved	0.013	7
Concrete Culverts	0.013	10
HDPE or PVC	0.012	10
◆ **Open Channels**		
Concrete, Trowel Finish	0.013	10
Concrete, Broom Finish	0.015	10
Gunite	0.018	10
Riprap Placed	0.030	10
Riprap Dumped	0.035	10
Gabion	0.028	10
New Earth **(1)**	0.025	4
Existing Earth **(2)**	0.030	4
Dense Growth of Weeds	0.040	4
Dense Weeds and Brush	0.040	4
Swale with Grass	0.035	4

Source of manning "n" values: HERPICC Stormwater Drainage Manual, July 1995.

(1) New earth (uniform, sodded, clay soil)

(2) Existing earth (fairly uniform, with some weeds). Various computer modeling programs such as HYDRA, ILLUDRAIN, and STORMCAD are available for analysis of storm drains under these conditions. Computer models to be utilized, other than those listed, must be accepted by the Town of Griffith.

D. Minimum Size for Storm Sewers

The minimum diameter of all storm sewers shall be 12 inches. When the minimum 12-inch diameter pipe will not limit the rate of release to the required amount, the rate of release for detention storage shall be controlled by an orifice plate or other device, subject to acceptance of the Town of Griffith.

E. Pipe Cover, Grade, and Separation from Sanitary Sewers and Water Mains

Pipe grade shall be such that, in general, a minimum of 2.0 feet of cover is maintained over the top of the pipe. If the pipe is to be placed under pavement, then the minimum pipe cover shall be 2.5 feet from top of pavement to top of pipe. Pipe cover less than the minimum may be allowed per manufacturer's specifications or recommendation and used only upon written acceptance from the Town of Griffith. Uniform slopes shall be maintained between inlets, manholes and inlets to manholes. Final grade shall be set with full consideration of the capacity required, sedimentation problems, and other design parameters. Minimum and maximum allowable slopes shall be those capable of producing velocities of between 2.5 and 10 feet per second, respectively, when the sewer is flowing full. Maximum permissible velocities for various storm sewer materials are listed in **Table 4-1**. Based on Kutter's formula using an "n" value of 0.013, the following are the minimum slopes should be provided. Slopes greater than these are desirable:

Sewer Size	Minimum Slope in Feet Per 100 Feet
12 inch	0.22
14 inch	0.17
15 inch	0.15
16 inch	0.14
18 inch	0.12
21 inch	0.10
24 inch	0.08
27 inch	0.067
30 inch	0.058
36 inch	0.046

A minimum of 2.0 feet of vertical separation between storm sewers and sanitary sewers shall be required. When this is not possible, the sanitary sewer must be encased in concrete or ductile steel within 5 feet, each side, of the crossing centerline. Storm sewers shall be laid at least 10 feet horizontally from any existing or proposed water main. The distance shall be measured edge to edge. In cases where it is not practical to maintain a ten-foot separation, the appropriate reviewing agency may allow deviation on a case-by-case basis, if supported by

data from the design engineer. Such deviation may allow installation of the storm sewer closer to a water main, provided that the water main is in a separate trench or on an undisturbed earth shelf located on one side of the storm sewer and at the elevation so the bottom of the water main is at least 18 inches above the top of the storm sewer.

F. Alignment

Storm sewers shall be straight between manholes and/or inlets.

G. Manholes/Inlets

All Inlets must be pre-stamped with an appropriate "clean water" message. Manholes and/or inlets shall be installed to provide human access to continuous underground storm sewers for the purpose of inspection and maintenance. The casting access minimum inside diameter shall be no less than 36 inches or a rectangular opening of no less than 22 inches by 22 inches. Manholes shall be provided at the following locations:

1. Where two or more storm sewers converge.

2. Where pipe size or the pipe material changes.

3. Where a change in horizontal alignment occurs.

4. Where a change in pipe slope occurs.

5. At intervals in straight sections of sewer, not to exceed the maximum allowed. The maximum distance between storm sewer manholes shall be as shown in **Table 4-2**.

TABLE 4-2

Maximum Distance Between Manholes	
Size of Pipe (Inches)	**Maximum Distance (Feet)**
12 through 42	400
48 and larger	600

In addition to the above requirements, a minimum drop of 0.1 foot through manholes and inlet structures should be provided. When changing pipe

size, match crowns of pipes, unless detailed modeling of hydraulic grade line shows that another arrangement would be as effective. Pipe slope should not be so steep that inlets surcharge (i.e. hydraulic grade line should remain below rim elevation).

6. Manhole/inlet inside sizing shall be as shown in **Table 4-3**.

TABLE 4-3

Manhole/Inlet Inside Sizing		
Depth of Structure	**Minimum Diameter**	**Minimum Square Opening**
Less than 5 feet	36 inches	36" x 36"
5 feet or more	48 inches	48" x 48"

H. Inlet Sizing and Spacing

Inlets or drainage structures shall be utilized to collect surface water through grated openings and convey it to storm sewers, channels, or culverts. The inlet grate opening provided shall be adequate to pass the design 10-year flow with 50% of the sag inlet areas clogged. An overload channel from sag inlets to the overflow channel or basin shall be provided at sag inlets. Inlet design and spacing may be done using the hydraulic equations by manufacturers or orifice/weir equations. Use of the U.S. Army Corps of Engineers HEC-12 computer program is also an acceptable method. Gutter spread on continuous grades may be determined using the Manning's equation, or by using **Figure 4-1**. Further guidance regarding gutter spread calculation may be found in the latest edition of HERPICC Stormwater Drainage Manual, available from the Local Technical Assistance Program (LTAP). At the time of printing of this document, contact information for LTAP was:

Indiana LTAP
Purdue University
Toll-Free: (800) 428-7369 (Indiana only)
Phone: (765) 494-2164
Fax: (765) 496-1176
Email: inltap@ecn.purdue.edu
Website: www.purdue.edu/INLTAP/

I. Installation and Workmanship

Bedding and backfill materials around storm sewer pipes, sub-drains, and the associated structures are limited to: #8 crushed stone, hand-tamped or walked-in; “B” borrow, compacted to 95% Standard Proctor density; flowable fill; and native or structural backfill, compacted to 95% Standard Proctor density. The specific location requirements for the use of these materials are dependent on pipe location in relation to pavement structures and on pipe material as detailed in **Figure 4-2** and **Figure 4-3**. The specifications for the construction of storm sewers and sub-drains, including backfill requirements, shall not be less stringent than those set forth in the latest edition of the INDOT, "Standard Specifications". Additionally, ductile iron pipe shall be laid in accordance with American Water Works Association (AWWA) C-600 and clay pipe shall be laid in accordance with either American Society of Testing Materials (ASTM) C-12 or the appropriate American Association of State Highway and Transportation Officials (AASHTO) specifications. Dips/sags on newly installed storm systems will not be allowed. Also, infiltration from cracks, missing pieces, and joints would not be allowed. Variations from these standards must be justified and receive written acceptance from the Town of Griffith.

J. Materials

Storm sewer manholes and inlets shall be constructed of cast in place concrete or precast reinforced concrete. Material and construction shall conform to the latest edition of the Indiana Department of Transportation (INDOT) "Standard Specifications", Sections 702 and 720.

Pipe and fittings used in storm sewer construction shall be extra-strength clay pipe (ASTM C-12), ductile iron pipe (AWWA C-151), poly vinyl chloride pipe (AASHTO M252), polyethylene pipe (AASHTO M252 or AASHTO M294), or concrete pipe (AASHTO M170). Other pipe and fittings not specified herein or in Sections 907-908 of the latest edition of the INDOT “Standard Specifications” may be used only when specifically authorized by the Town of Griffith. Pipe joints shall be flexible and watertight and shall conform to the requirements of Section 906, of the latest edition of the INDOT "Standard Specifications". **If the storm sewer pipe is to be placed within a road right-of-way or in an area subject to loading, the pipe and fittings shall be concrete.**

K. Special Hydraulic Structures

Special hydraulic structures required to control the flow of water in storm runoff drainage systems include junction chambers, drop manholes, stilling basins, and

other special structures. The use of these structures shall be limited to those locations justified by prudent planning and by careful and thorough hydraulic engineering analysis. Certification of special structures by a certified Structural Engineer may also be required.

L. Connections to Storm Sewer System

To allow any connections to the storm sewer system, provisions for the connections shall be shown in the drainage calculations for the system. Specific language shall be provided in the protective covenants, on the record plat, or with the parcel deed of record, noting the ability or inability of the system to accommodate any permitted connections, for example, sump pumps and footing drains.

1. **Sump pumps** installed to receive and discharge groundwater or other stormwater shall be connected to the storm sewer where possible or discharged into a designated storm drainage channel/swale. Sump pumps installed to receive and discharge floor drain flow or other sanitary sewage shall be connected to the sanitary sewers. A sump pump shall be used for one function only, either the discharge of stormwater or the discharge of sanitary sewage.

2. **Footing drains and perimeter drains** shall be connected to Manholes or Curb inlets, where possible, or to designated storm sewers or discharged into designated storm drainage channels/swales.

3. All **roof downspouts**, roof drains, or roof drainage piping shall discharge onto the ground and shall not be directly connected to the storm drainage system. Variation from this requirement may be requested and granted by the Town of Griffith in special circumstances. No downspouts or roof drains shall be connected to the sanitary sewers.

4. **Swimming Pool drains** shall not be connected to the storm sewers.

In addition, none of the above mentioned devices shall be connected to any street underdrains, unless specifically authorized by the Town of Griffith.

M. Drainage System Overflow Design

Overflow path/ponding areas throughout the development resulting from a 100-year storm event, calculated based on all contributing drainage areas, on-site and off-site, in their proposed or reasonably anticipated land use and with storm pipe system assumed completely plugged, shall be determined, clearly shown as

hatched area on the plans, and a minimum width of 30 feet along the centerline of the flow path contained in permanent drainage easements. A statement shall be added to the plat that would refer the viewer to the construction plans to see the entire extent of overflow path as hatched areas. No fences or landscaping can be constructed within the easement areas that may impede the free flow of Stormwater. These areas are to be maintained by the property owners or be designated as common areas that are to be maintained by the homeowners association. The Lowest Adjacent Grade for all residential, commercial, or industrial buildings shall be set a minimum of 1 foot above the noted overflow path/ponding elevation.

The overflow path/ponding may be modeled as successive series of natural ponds and open channel segments. Ponds should be modeled similar to that discussed for modeling depressional areas in Chapter 6. Channels should be modeled according to modeling techniques discussed in Chapter 5. The calculations for determining the 100-year overflow path/ponding elevations may be based on hand calculation methods utilizing normal depth calculations and storage routing techniques or performed by computer models. Examples of computer models that either individually or in combination with other models can handle the required computations include TR-20, HEC-HMS, and HEC-1, combined with HEC-RAS. Other models may be acceptable and should be accepted by the Town of Griffith prior to their utilization.

Values in Table 4-4 may be utilized as an alternative to the above-noted detailed calculations for determining the required pad elevations of buildings near an overflow path.

TABLE 4-4

Building Pad Elevations With Respect to Overflow Path Invert Elevations		
Drainage Area (acres)	**Building Pad Above Overflow Path Invert (ft.)**	**Building Pad Above Overflow Path Invert, if Overflow Path is in the Street (ft.)**
Up to 5	2.5	1.5
6-10	3.0	1.5
11-15	3.25	1.75
16-20	3.5	1.75
21-30	4.0	2.0

Building Pad Elevations With Respect to Overflow Path Invert Elevations		
Drainage Area (acres)	**Building Pad Above Overflow Path Invert (ft.)**	**Building Pad Above Overflow Path Invert, if Overflow Path is in the Street (ft.)**
30-50	4.25	2.0

If Table 4-4 is used, the Town of Griffith reserves the right to require independent calculations to verify that the proposed building pads provide approximately 1 foot of freeboard above the anticipated overflow path/ponding elevations.

In the case of existing upstream detention, an allowance equivalent to the reduction in flow rate provided may be made for upstream detention only when: (1) such detention and release rate have previously been accepted by the Town of Griffith official charged with the approval authority at the time of the acceptance, and (2) evidence of its construction and maintenance can be shown.

FIGURE 4-1
Street and Gutter Capacities (continuous grade)

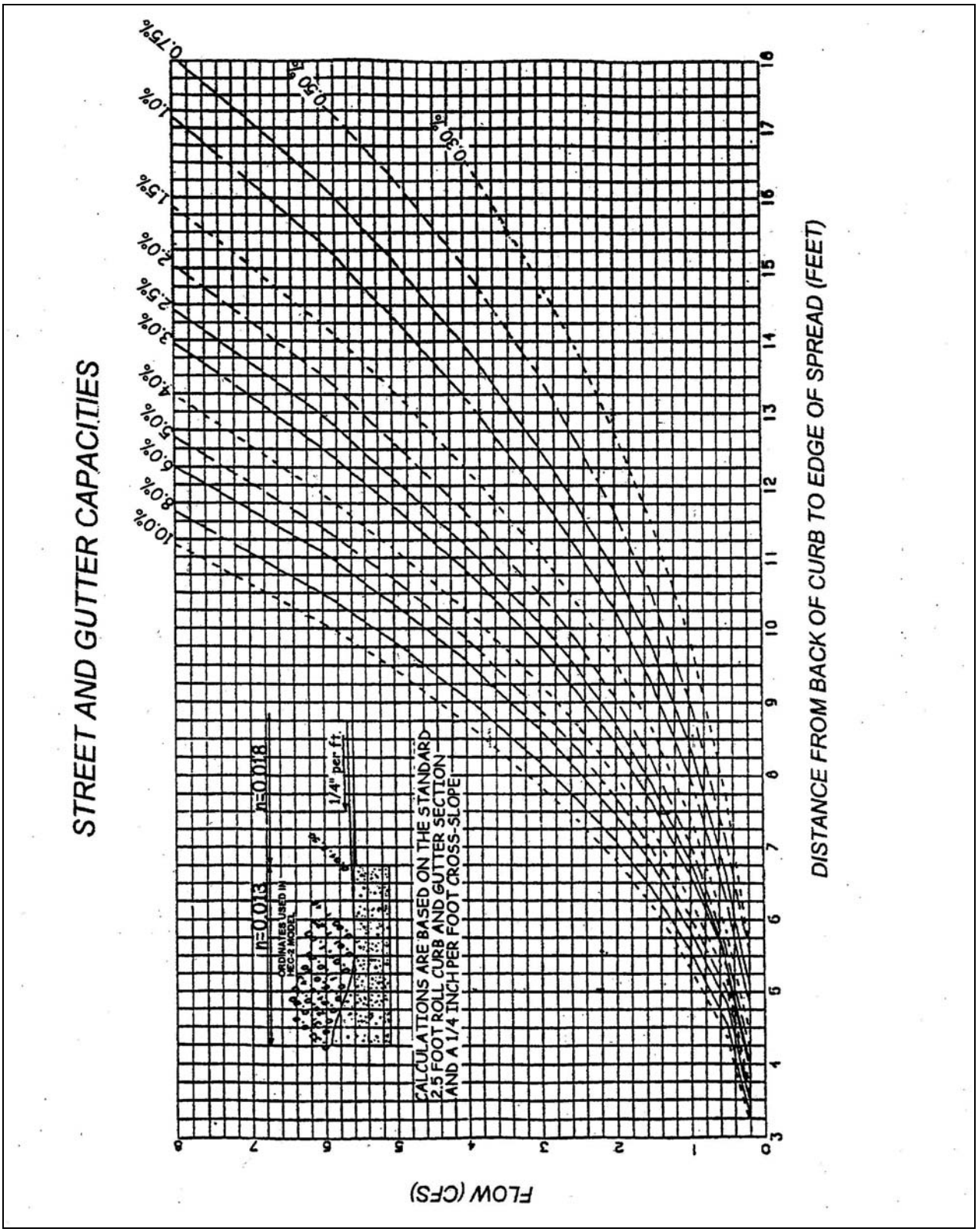

FIGURE 4-2
Bedding and Backfill Standards for Storm Sewers

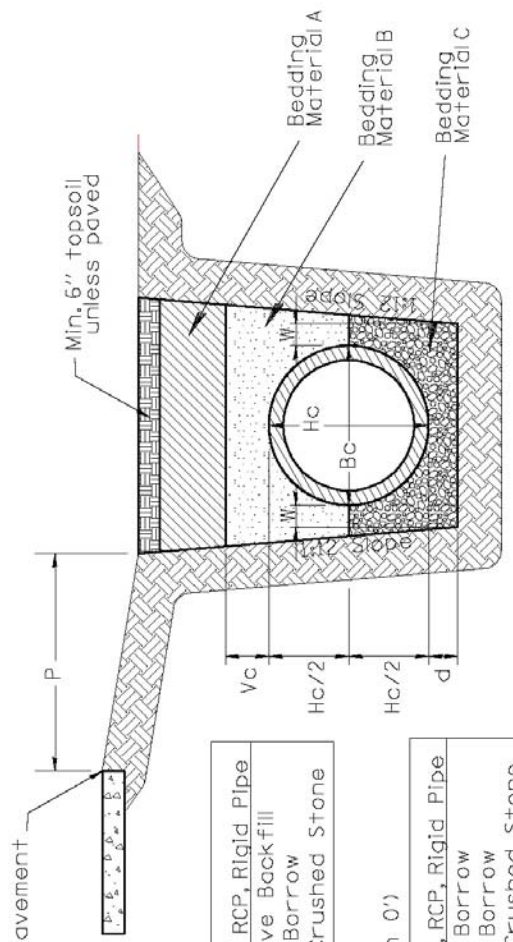

Bedding Material Designation
(P greater than 5')

	PVC, HDPE, Plastic Pipe	CMP, RCP, Rigid Pipe
Material A	Native Backfill	Native Backfill
Material B	#8 Crushed Stone	''B'' Borrow
Material C	#8 Crushed Stone	#8 Crushed Stone

Bedding Material Designation
(P less than than 5', but greater than 0')

	PVC, HDPE, Plastic Pipe	CMP, RCP, Rigid Pipe
Material A	''B'' Borrow	''B'' Borrow
Material B	#8 Crushed Stone	''B'' Borrow
Material C	#8 Crushed Stone	#8 Crushed Stone

Bedding Material Designation
(Pipe Under Pavement or Driveway)

	PVC, HDPE, Plastic Pipe	CMP, RCP, Rigid Pipe
Material A	Pipe Not Allowed	''B'' Borrow
Material B		''B'' Borrow
Material C		#8 Crushed Stone

LEGEND

P = Distance from edge of pavement
Hc = Outside diameter or rise
Bc = Outside diameter or span
d = Depth of bedding material below pipe
= 8'' min. for fill height up to 16'
= 12'' min for fill height of 16' or more
Vc = 12'' for Bc up to 18''
= 18'' for Bc > 18''
W = 0.3 Bc or 9'', whichever is greater

NOTES:

1. INDOT Type 1 pipe required for storm sewers/culverts under pavement
2. INDOT Type 2 pipe required for storm sewers/culverts outside of pavement
3. All bedding shall be installed in 6'' to 12'' balanced lifts
4. For backfill purposes, paved shoulders, curbs, gutters, and sidewalkss are considered pavement
5. Flowable backfill shall be encased by a minimum of 2 feet of compacted earth backfill
6. Plastic pipes fabricated on hydrostatic design basis rated resins considered rigid for backfill purposes

FIGURE 4-3
Bedding and Backfill Standards for Sub-drains under Swales

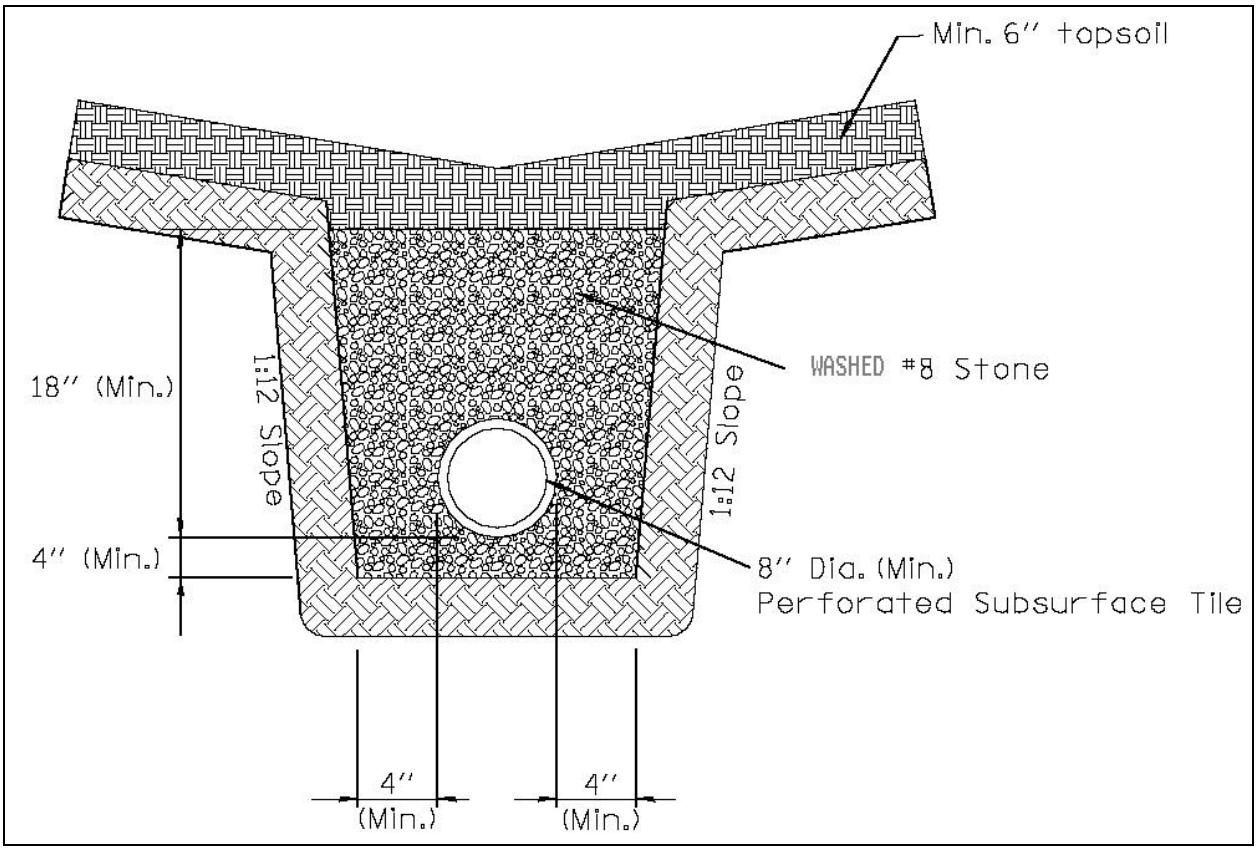

Chapter Five

OPEN CHANNEL DESIGN STANDARDS AND SPECIFICATIONS

All channels, whether private or public, and whether constructed on private or public land, shall conform to the design standards and other design requirements contained herein.

A. Design Storm Frequencies

1. All channels and swales shall accommodate, as a minimum, peak runoff from a 24-hour, 10-year return frequency storm calculated based on methodology described in Chapter 2. For Rational Method analysis, the storm duration shall be equal to the time of concentration for the drainage area. In computer-based analysis, the duration is as noted in the applicable methodology associated with the computer program.

2. Channels with a carrying capacity of more than 30 cfs at bank-full stage shall be capable of accommodating peak runoff for a 24-hour, 50-year return frequency storm within the drainage easement.

3. Channel facilities functioning as a major drainage system, as defined in **Appendix A**, must also meet IDNR design standards.

4. The 10-year storm design flow for residential rear and side lot swales shall not exceed 4 cfs. The maximum length of rear and side lot swales before reaching any inlet shall not exceed 400 feet.

5. Regardless of minimum design frequencies stated above, the performance of all parts of drainage system shall be checked for the 100-year flow conditions to insure that all buildings are properly located outside the 100-year flood boundary and that flow paths are confined to designated areas with sufficient easement.

B. Manning's Equation

The waterway area for channels shall be determined using Manning's Equation, where:

$$A = Q/V$$

A = Waterway area of channel in square feet

Q = Discharge in cubic feet per second (cfs)

V = Steady-State channel velocity, as defined by Manning's Equation (See Chapter 4)

C. Backwater Method for Drainage System Analysis

The determination of 100-year water surface elevation along channels and swales shall be based on accepted methodology and computer programs designed for this purpose. Computer programs HEC-RAS, HEC-2, and ICPR are preferred programs for conducting such backwater analysis. The use of other computer models must be accepted in advance by the Town of Griffith.

D. Channel Cross-Section and Grade

1. The required channel cross-section and grade are determined by the design capacity, the material in which the channel is to be constructed, and the requirements for maintenance. A minimum depth may be required to provide adequate outlets for subsurface drains, tributary ditches, or streams. The channel grade shall be such that the velocity in the channel is high enough to prevent siltation but low enough to prevent erosion. Velocities less than 2 feet per second are not acceptable, as siltation will take place and ultimately reduce the channel cross-section area. The maximum permissible velocities in vegetated-lined channels are shown in **Table 5-1.** In addition to existing runoff, the channel design should incorporate increased runoff due to the proposed development.

2. Where depth of design flow is slightly below critical depth, channels shall have freeboard adequate to cope with the effect of hydraulic jumps.

3. Along the streets and roads, the bottom of the ditch should be low enough to install adequately-sized driveway culverts without creating "speed bumps". The driveway culvert inverts shall be designed to adequately consider upstream and downstream culvert elevations.

4. Flow of a channel into a closed system is prohibited, unless runoff rate and head loss computations demonstrate the closed conduit to be capable of carrying the 100-year channel flow for developed conditions, either entirely or in combination with a defined overflow channel, with no reduction of velocity.

TABLE 5-1

Maximum Permissible Velocities in Vegetal-Lined Channels (1)			
Cover	*Channel Slope Range (Percent)* **(3)**	*Permissible Velocity* **(2)**	
		Erosion Resistant Soils (ft. per sec.) **(4)**	*Easily Eroded Soils (ft. per sec.)* **(4)**
Bermuda Grass	0-5 5-10 Over 10	8 7 6	6 5 4
Bahia Buffalo Grass Kentucky Bluegrass Smooth Brome Blue Grama	 0-5 5-10 Over 10	 7 6 5	 5 4 3
Grass Mixture Reed Canary Grass	**(3)** 0-5 5-10	5 4	4 3
Lespedeza Sericea Weeping Lovegrass Yellow Bluestem Redtop Alfalfa Red Fescue	**(4)** 0-5 5-10	3.4	2.5
Common Lespedeza **(5)** Sudangrass **(5)**	**(6)** 0-5	3.5	2.5

(1) From Soil Conservation Service, SCS-TP-61, "Handbook of Channel Design for Soil and Water Conservation".

(2) Use velocities exceeding 5 feet per second only where good channel ground covers and proper maintenance can be obtained.

(3) Do not use on slopes steeper than 10 percent except for vegetated side slopes in combination with a stone, concrete, or highly resistant vegetative center section.

(4) Do not use on slopes steeper than 5 percent except for vegetated side slopes in combination with a stone, concrete, or highly resistant vegetative center section.

(5) Annuals - use on mild slopes or as temporary protection until permanent covers are established.

(6) Use on slopes steeper than 5 percent is not recommended.

E. Side Slopes

1. Earthen channel and swale side slopes shall be no steeper than 3 horizontal to 1 vertical (3:1). Flatter slopes may be required to prevent erosion and for ease of maintenance.

2. Where channels will be lined with riprap, concrete, or other acceptable lining method, side slopes shall be no steeper than 2 horizontal to 1 vertical (2:1) with adequate provisions made for weep holes.

3. Side slopes steeper than 2 horizontal to 1 vertical (2:1) may be used for lined channels provided that the side lining is designed and constructed as a structural retaining wall with provisions for live and dead load surcharge.

4. When the design discharge produces a depth of greater than three (3) feet in the channel, appropriate safety precautions shall be added to the design criteria based on reasonably anticipated safety needs.

F. Channel Stability

1. Characteristics of a stable channel are:

   a] It neither promotes sedimentation nor degrades the channel bottom and sides.

   b] The channel banks do not erode to the extent that the channel cross-section is changed appreciably.

   c] Excessive sediment bars do not develop.

   d] Excessive erosion does not occur around culverts, bridges, outfalls or elsewhere.

   e] Gullies do not form or enlarge due to the entry of uncontrolled flow to the channel.

2. Channel stability shall be determined for an aged condition and the velocity shall be based on the design flow or the bankfull flow, whichever is greater, using an "n" value for various channel linings as shown in **Tables 4-1 and 5-1**. In no case is it necessary to check channel stability for discharges greater than that from a 100-year frequency storm.

3. Channel stability shall be checked for conditions representing the period immediately after construction. For this stability analysis, the velocity shall be calculated for the expected flow from a 10-year frequency storm on the watershed, or the bankfull flow, whichever is smaller, and the "n" value for the newly constructed channels in fine-grained soils and sands may be determined in accordance with the "National Engineering Handbook 5, Supplement B, Soil Conservation Service" and shall not exceed 0.025. This reference may be obtained by contacting the National Technical Information Service in Springfield. The allowable velocity in the newly constructed channel may be increased by a maximum of 20 percent to reflect the effects of vegetation to be established under the following conditions:

   a] The soil and site in which the channel is to be constructed are suitable for rapid establishment and support of erosion controlling vegetation.

   b] Species of erosion controlling vegetation adapted to the area, and proven methods of establishment are shown.

   c] The channel design includes detailed plans for establishment of vegetation on the channel side slopes.

G. Drainage of Swales

Minimum swale slopes are 0.5%. All flow shall be confined to the specific easements associated with each rear and side lot swale that are part of the minor drainage system. Unless designed to act as a stormwater quality BMP, vegetated swales with a slope less than 1.0 % shall have tile underdrains to dry the swales. (See Figure 4-3). Tile lines may be outletted through a drop structure at the ends of the swale or through a standard tile outlet. Further guidance regarding this subject may be found in the latest edition of the Indiana Drainage Handbook.

H. Appurtenant Structures

The design of channels will include provisions for operation and maintenance and the proper functioning of all channels, laterals, travelways, and structures associated with the project. Recessed inlets and structures needed for entry of surface and subsurface flow into channels without significant erosion or degradation shall be included in the design of channel improvements. The design will also provide for necessary floodgates, water level control devices, and any other appurtenance structure affecting the functioning of the channels and the attainment of the purpose for which they are built.

The effects of channel improvements on existing culverts, bridges, buried cables, pipelines, and inlet structures for surface and subsurface drainage on the channel being improved and laterals thereto shall be evaluated to determine the need for modification or replacement. Culverts and bridges which are modified or added as part of channel improvement projects shall meet reasonable standards for the type of structure, and shall have a minimum capacity equal to the design discharge or governmental agency design requirements, whichever is greater.

I. Deposition of Spoil

Spoil material resulting from clearing, grubbing, and channel excavation shall be disposed of in a manner that will:

1. Minimize overbank wash.

2. Provide for the free flow of water between the channel and floodplain boundary unless the valley routing and water surface profiles are based on continuous dikes being installed.

3. Not hinder the development of travelways for maintenance.

4. Leave the right-of-way in the best condition feasible, consistent with the project purposes, for productive use by the owner.

5. Be accepted by the IDNR or COE, if applicable.

J. Materials

Materials acceptable for use as channel lining are:

1. Grass
2. Revetment Riprap
3. Concrete
4. Hand Laid Riprap
5. Precast Cement Concrete Riprap
6. Gabions
7. Straw or Coconut Mattings (only until grass is established)

Other lining materials must be accepted in writing by the Town of Griffith. Materials shall comply with the latest edition of the INDOT, "Standard Specifications".

K. Drainage System Overflow Design

Ponding and overflow path throughout the development resulting from a 100-year storm event, calculated based on all contributing drainage areas, on-site and off-site, in their proposed or reasonably anticipated land use and with storm pipe system assumed completely plugged, shall be determined, clearly shown as hatched area on the plans, and a 30 feet along the centerline of the overflow path contained in permanent drainage easements. A statement shall be added to the plat that would refer the viewer to the construction plans to see the entire extent of overflow path as hatched areas. No fences or landscaping can be constructed within the easement areas that may impede the free flow of Stormwater. These areas are to be maintained by the property owners or be designated as common areas that are to be maintained by the homeowners association. The Lowest Adjacent Grade for all residential, commercial, or industrial buildings shall be set a minimum of 1 foot above the noted overflow path/ponding elevation.

The overflow path/ponding may be modeled as successive series of natural ponds and open channel segments. Ponds should be modeled similar to that discussed for modeling depressional areas in Chapter 6. Channels should be modeled according to modeling techniques discussed earlier in this Chapter. The calculations for determining the 100-year overflow path/ponding elevations may be based on hand calculation methods utilizing normal depth calculations and storage routing techniques or performed by computer models. Examples of computer models that either individually or in combination with other models can handle the required computations include TR-20, HEC-HMS, and HEC-1, combined with HEC-RAS. Other models may be acceptable and should be accepted by the Town of Griffith prior to their utilization.

Values in Table 4-4 may be utilized as an alternative to the above-noted detailed calculations for determining the required pad elevations of buildings near an overflow path.

If Table 4-4 is used, the Town of Griffith reserves the right to require independent calculations to verify that the proposed building pads provide approximately 1 foot of freeboard above the anticipated overflow path/ponding elevations.

In the case of existing upstream detention, an allowance equivalent to the reduction in flow rate provided may be made for upstream detention only when: (1) such detention and release rate have previously been accepted by the Town of Griffith official charged with the approval authority at the time of the acceptance, and (2) evidence of its construction and maintenance can be shown.

Chapter Six

STORMWATER DETENTION DESIGN STANDARDS

The following shall govern the design of any improvement with respect to the detention of stormwater runoff. Basins shall be constructed to temporarily detain the stormwater runoff that exceeds the maximum peak release rate authorized by this Ordinance. The required volume of storage provided in these basins, together with such storage as may be authorized in other on-site facilities, shall be sufficient to control excess runoff from the 10-year or 100-year storm as explained below in Section "B.". Also, basins shall be constructed to provide adequate capacity to allow for sediment accumulation resulting from development and to permit the pond to function for reasonable periods between cleanings.

A. Acceptable Detention Facilities

The increased stormwater runoff resulting from a proposed development should be detained on-site by the provisions of appropriate wet bottom or dry bottom detention facilities, parking lots, or other acceptable techniques. Measures that retard the rate of overland flow and the velocity in runoff channels shall also be used to partially control runoff rates.

B. Allowable Release Rates

1. General Release Rates
   Control devices shall limit the discharge to a rate such that the post-developed release rate from the site is no greater than 0.2 cfs per acre of development for 0-100 year return interval storms. For sites where the pre-developed area has more than one (1) outlet, the release rate should be computed based on pre-developed discharge to each outlet point. The computed release rate for each outlet point shall not be exceeded at the respective outlet point even if the post developed conditions would involve a different arrangement of outlet points.

2. Site-Specific Release Rates for Sites with Depressional Storage
   For sites where depressional storage exists, the general release rates provided above may have to be further reduced. If depressional storage exists at the site, site-specific release rates must be calculated according to methodology described in Chapter 2, accounting for the depressional storage by modeling it as a pond whose outlet is a weir at an elevation that stormwater can currently overflow the depressional storage area. Post developed release rate for sites with depressional storage shall be the 2-year pre-developed peak runoff rate for the post-developed 100-year

storm. In no case shall the calculated site-specific release rates be larger than general release rates provided above.

Note that by definition, the depressional storage does not have a direct gravity outlet but if in agricultural production, it is more than likely drained by a tile and should be modeled as "empty" at the beginning of a storm. The function of any existing depressional storage should be modeled using an event hydrograph model to determine the volume of storage that exists and its effect on the existing site release rate. To prepare such a model, certain information must be obtained, including delineating the tributary drainage area, the stage-storage relationship and discharge-rating curve, and identifying the capacity and elevation of the outlet(s).

The tributary area should be delineated on the best available topographic data. After determining the tributary area, a hydrologic analysis of the watershed should be performed, including, but not limited to: a calculation of the appropriate composite runoff curve number and time of concentration. Stage-storage data for the depressional area should be obtained from the site topography. The outlet should be clearly marked and any calculations performed to create a stage-discharge rating curve must be included with the stormwater submittal.

Also note that for determining the post-developed peak runoff rates, the depressional storage must be assumed to be filled unless the Town of Griffith can be assured, through dedicated easement, that the noted storage will be preserved in perpetuity.

3. Management of Off-site Runoff

Runoff from all upstream tributary areas (off-site land areas) may be bypassed around the detention/retention facility without attenuation. Such runoff may also be routed through the detention/retention facility, provided that a separate outlet system or channel is incorporated for the safe passage of such flows, i.e., not through the primary outlet of a detention facility. Unless the pond is being designed as a regional detention facility, the primary outlet structure shall be sized and the invert elevation of the emergency overflow weir determined according to the on-site runoff only. Once the size and location of primary outlet structure and the invert elevation of the emergency overflow weir are determined by considering on-site runoff, the 100-year pond elevation is determined by routing the entire inflow, on-site and off-site, through the pond.

Note that the efficiency of the detention/retention facility in controlling the on-site runoff may be severely affected if the off-site area is considerably larger than the on-site area. As a general guidance, on-line detention may not be effective in controlling on-site runoff where the ratio of off-site area

to on-site area is larger than 5:1. Additional detention (above and beyond that required for on-site area) may be required by the Town of Griffith when the ratio of off-site area to on-site area is larger than 5:1.

4. Downstream Restrictions

In the event the downstream receiving channel or storm sewer system is inadequate to accommodate the post-developed release rate provided above, then the allowable release rate shall be reduced to that rate permitted by the capacity of the receiving downstream channel or storm sewer system. Additional detention, as determined by the Town of Griffith, shall be required to store that portion of the runoff exceeding the capacity of the receiving sewers or waterways. When such downstream restrictions are suspected, the Town of Griffith may require additional analysis to determine the receiving system's limiting downstream capacity.

If the proposed development makes up only a portion of the undeveloped watershed upstream of the limiting restriction, the allowable release rate for the development shall be in direct proportion to the ratio of its drainage area to the drainage area of the entire watershed upstream of the restriction.

C. General Detention Basin Design Requirements

1. The detention facility shall be designed in such a manor that a minimum of 90% of the maximum volume of water stored and subsequently released at the design release rate shall not result in a storage duration in excess of 48 hours from the start of the storm unless additional storms occur within the period. In other words, the design shall ensure that a minimum 90% of the original detention capacity is restored within 48 hours from the start of the design 100-year storm.

2. The 100-year elevation of stormwater detention facilities shall be separated by not less than 25 feet from any building or structure to be occupied. The Lowest Adjacent Grade (including walkout basement floor elevation) for all residential, commercial, or industrial buildings shall be set a minimum of 2 feet above the 100-year pond elevation or 2 feet above the emergency overflow weir elevation, whichever is higher. In addition to the Lowest Adjacent Grade requirements, any basement floor must be at least a foot above the normal water level of any wet-bottom pond.

3. No detention facility or other water storage area, permanent or temporary, shall be constructed under or within twenty (20) feet of any pole or high voltage electric line. Likewise, poles or high voltage electric lines shall

not be placed within twenty (20) feet of any detention facility or other water storage area.

4. All stormwater detention facilities shall be separated from any road right-of-way by no less than one right-of-way width, measured from the top of bank or the 100-year pool if no defined top of bank is present, using the most restrictive right-of-way possible. If the width of the right-of-way is less than 50 feet, then the minimum distance between top of bank and road right-of-way shall be increased to 50 feet. Use of guard rails, berms, or other structural measures may be considered in lieu of the above-noted setbacks.

5. Slopes no steeper than 3 horizontal to 1 vertical (3:1) for safety, erosion control, stability, and ease of maintenance shall be permitted.

6. Safety screens having a maximum opening of four (4) inches shall be provided for any pipe or opening to prevent children or large animals from crawling into the structures.

7. Prior to final acceptance, danger signs shall be mounted at appropriate locations to warn of deep water, possible flood conditions during storm periods, and other dangers that exist. The locations of the noted danger signs shall be shown on the plans.

8. Use of fences around all detention ponds is strongly encouraged to assure safety.

   Unless specifically required by the Town of Griffith, the decision to use fencing around detention ponds are left to the owner or the developer. Recommendations contained within this document do not relieve the applicant and owner/developer from the responsibility of taking all necessary steps to ensure public safety with regards to such facilities.

9. Outlet control structures shall be designed to operate as simply as possible and shall require little or no maintenance and/or attention for proper operation. For maintenance purposes, the outlet shall be a minimum of 0.5 foot above the normal water level of the receiving water body. They shall limit discharges into existing or planned downstream channels or conduits so as not to exceed the predetermined maximum authorized peak flow rate.

10. Emergency overflow facilities such as a weir or spillway shall be provided for the release of exceptional storm runoff or in emergency conditions should the normal discharge devices become totally or partially inoperative. The overflow facility shall be of such design that its operation is automatic and does not require manual attention.

a] Off-site flows greater than the allowable release rate for the pond shall be conveyed through the emergency spillway, not through the primary outlet structure. Unless the pond is being designed as a regional detention facility, the primary outlet structure shall be sized and the invert elevation of the emergency overflow weir determined according to the on-site runoff only and all other flows shall be either retained or safely bypassed through the emergency overflow weir.

b] Emergency overflow facilities shall be designed to handle one and one-quarter (1.25) times the peak inflow discharge and peak flow velocity resulting from the 100-year design storm event runoff from the entire contributing watershed draining to the detention/retention facility, assuming post-development condition on-site and existing condition off-site,.

11. Grass or other suitable vegetative cover shall be provided along the banks of the detention storage basin. Vegetative cover around detention facilities should be maintained as appropriate.

12. Debris and trash removal and other necessary maintenance shall be performed on a regular basis to assure continued operation in conformance to design.

13. No residential lots or any part thereof, shall be used for any part of a detention basin or for the storage of water, either temporary or permanent.

D. Additional Requirements for Wet-Bottom Facility Design

Where part of a detention facility will contain a permanent pool of water, all the items required for detention storage shall apply. Also, a controlled positive outlet will be required to maintain the design water level in the wet bottom facility and provide required detention storage above the design water level. However, the following additional conditions shall apply:

1. Facilities designed with permanent pools or containing permanent lakes shall have a water area of at least one-half (0.5) acre. If fish are to be used to keep the pond clean, a minimum depth of approximately ten (10) feet shall be maintained over at least 25 percent of the pond area. The remaining pond area shall have no extensive shallow areas, except as required to install the safety ramp, safety ledge, and BMPs as required below. Construction trash or debris shall not be placed within the permanent pool.

2. A safety ledge six (6) to ten (10) feet in width, depending on the presence of a security fence, is required and shall be installed in all lakes approximately 18 inches below the permanent water level (normal pool elevation). In addition, a similar maintenance ledge 12 inches above the permanent water line shall be provided. The slope between the two ledges shall be stable and of a material such as stone or riprap which will prevent erosion due to wave action. The slopes below the safety ledge shall be 3:1 (horizontal to vertical) or flatter. The slopes above the safety ledge shall be 6:1 or flatter, unless a safety fence is used, in which case the side slopes above the safety ledge (except for the safety ramp area) shall be 3:1 or flatter.

As illustrated in Figures 6-1 and 6-2, the safety ledge is currently required to be 18 inches below the normal pool and 6-10 feet wide, depending on the presence of a security fence. As an alternative to providing a security fence, the depth of safety ledge could be changed to be anywhere from 0 to 6 inches below normal pool to encourage vegetation growth. Wetland plants can be installed as container grown plants or as seed at the time of construction, or the area can be left to be naturally colonized. When a vegetated ledge is used in lieu of a security fence, the safety ledge width shall be increased to 15 feet to allow more room to stop in the event of accidental entry into the pond. The vegetated ledge might discourage play near the edge of the pond and help stop a wayward bike or sled. Additional benefits to the vegetated ledge are stormwater quality improvement and goose deterrence. In lieu of a vegetated safety ledge, a zone of dense shrubs could be installed around the perimeter of the pond to discourage access. Shrubs and vines with briars and thorns or dense growth patterns make good deterrents.

Special Regulatory Note:

Detention ponds that include wetland features will not fall within the jurisdiction of IDEM or COE as long as:

- The pond is clearly identified on plans and in accompanying documentation as a stormwater treatment Best Management Practice (BMP).
  The pond has not been abandoned, and is maintained as originally designed.
  The pond is not part of required wetland mitigation.
  Construction of the pond does not impact existing jurisdictional wetlands or waterways.

Therefore, detention pond maintenance would not require a permit just because wetland features have been included in their construction.

In lieu of a vegetated safety ledge, a zone of dense shrubs could be installed around the perimeter of the pond to discourage access. Shrubs and vines with briars and thorns or dense growth patterns make good deterrents.

3. A safety ramp exit from the lake shall be required in all cases and shall have a minimum width of twenty (20) feet and exit slope of 6 horizontal to 1 vertical (6:1). The safety ramp shall be constructed of suitable material to prevent structural instability due to vehicles or wave action.

4. Periodic maintenance is required in lakes to control weed and larval growth. The facility shall also be designed to provide for the easy removal of sediment that will accumulate during periods of reservoir operation. A means of maintaining the designed water level of the lake during prolonged periods of dry weather may also be required.

5. Methods to prevent pond stagnation, including but not limited to aeration facilities, shall be included on all wet-bottom ponds. Design calculations to substantiate the effectiveness of proposed aeration facilities shall be submitted with final engineering plans. Agreements for the perpetual operation and maintenance of aeration facilities shall be prepared to the satisfaction of the Town of Griffith.

6. For visual clarification, refer to **Figures 6-1** and **6-2**.

E. Additional Requirements for Dry-Bottom Facility Design

In addition to general design requirements, detention facilities that will not contain a permanent pool of water shall comply with the following requirements:

1. Provisions shall be incorporated into facilities for complete interior drainage of dry bottom facilities, including the provisions of natural grades to outlet structures, longitudinal and transverse grades to perimeter drainage facility, paved gutters, or the installation of subsurface drains.

2. For residential developments, the maximum planned depth of stormwater stored shall not exceed four (4) feet.

3. In excavated detention facilities, a minimum side slope of 3:1 shall be provided for stability. In the case of valley storage, natural slopes may be considered to be stable.

F. Parking Lot Storage

Paved parking lots may be designed to provide temporary detention storage of stormwater on all or a portion of their surfaces. Outlets for parking lot storage of stormwater will be designed so as to empty the stored waters slowly. Depths of

storage shall be limited to a maximum depth of seven (7) inches so as to prevent damage to parked vehicles and so that access to parked vehicles is not impaired. Ponding should in general, be confined to those positions of the parking lots farthest from the area served.

G. Detention Facilities in Floodplains

If detention storage is provided within a 100-year floodplain, only the net increase in storage volume above that which naturally existed on the floodplain shall be credited to the development. In order to be hydraulically effective, the rim elevation of such detention pond, including any open spillways, should be at or above the 100-year floodplain elevation and, unless the detention pond storage is provided entirely above the 100-year flood elevation, any pipe outlets must be equipped with a backflow prevention device. A detention pond constructed within the 100-year floodplain and utilizing a backflow prevention device will eliminate the floodplain storage that existed on the detention pond site, and will therefore require compensatory floodplain storage. The detention analysis for a detention pond in the floodplain must consider appropriate tailwater impacts and the effect of any backflow prevention device.

FIGURE 6-1
Wet –Bottom Detention Facility – With Fence

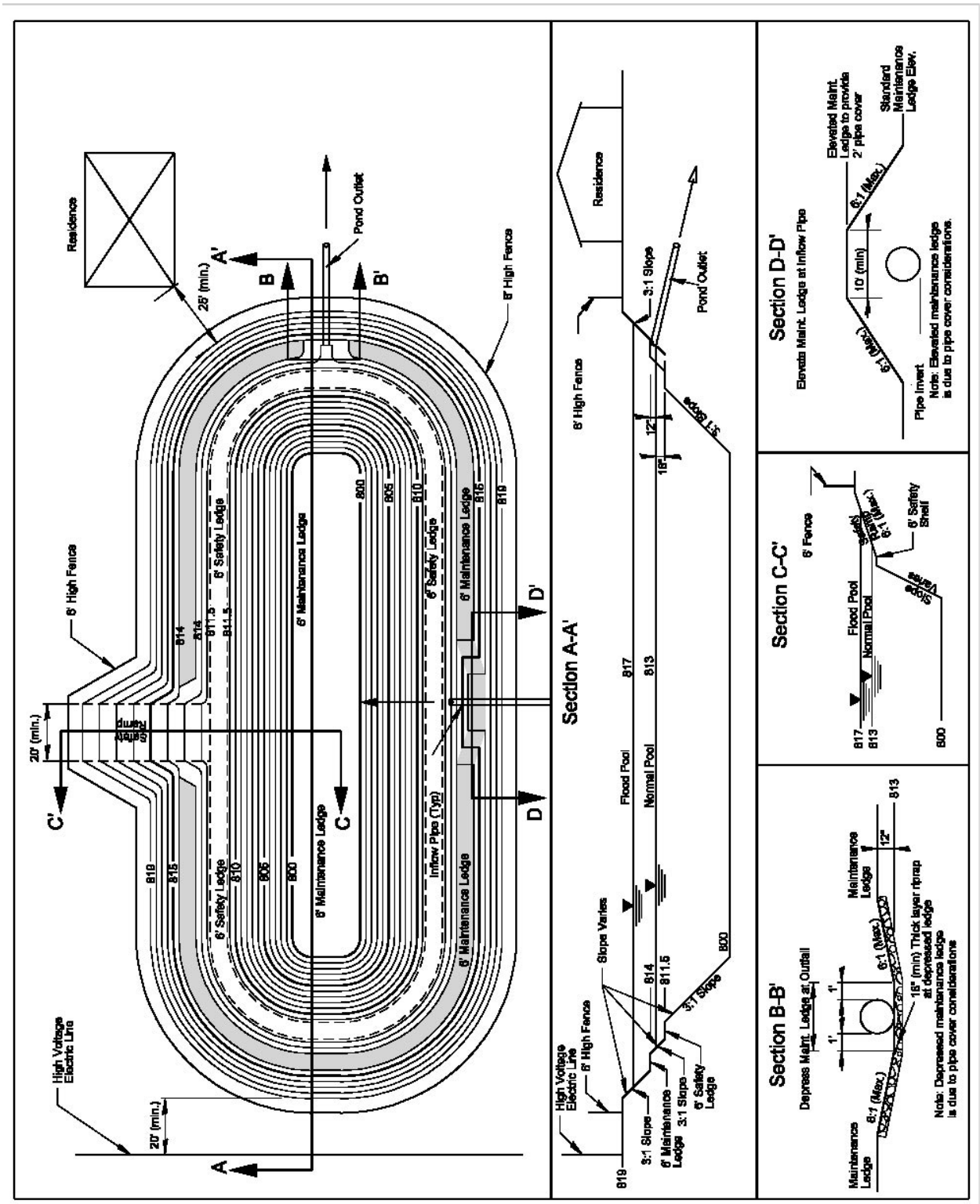

FIGURE 6-2
Wet –Bottom Detention Facility – Without Fence

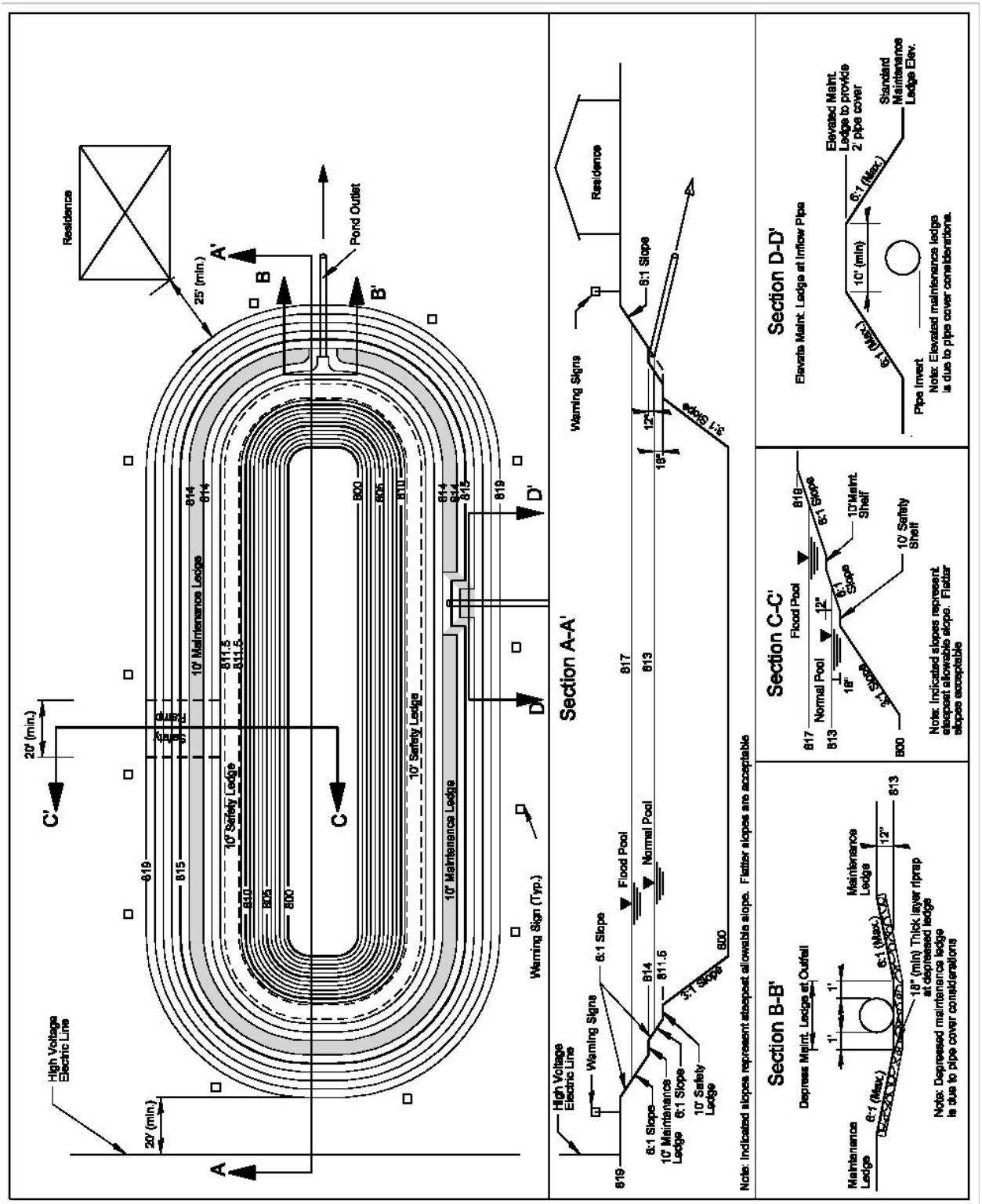

H. Joint Development of Control Systems

Stormwater control systems may be planned and constructed jointly by two or more developers as long as compliance with this Ordinance is maintained.

I. Diffused Outlets

When the allowable runoff is released in an area that is susceptible to flooding or erosion, the developer may be required to construct appropriate storm drains through such area to avert increased flood hazard caused by the concentration of allowable runoff at one point instead of the natural overland distribution. The requirement of diffused outlet drains shall be at the discretion of the Town of Griffith.

J. IDNR Requirements

All designs for basins to be constructed in the floodway of a stream with a drainage area of one square mile or more must also satisfy IDNR permit requirements.

K. Allowance for Sedimentation

Detention basins shall be designed with an additional ten (10) percent of available capacity to allow for sediment accumulation resulting from development and to permit the pond to function for reasonable periods between cleanings. Basins should be designed to collect sediment and debris in specific locations, such as a forebay, so that removal costs are kept to a minimum. For wet-bottom ponds, the sediment allowance may be provided below the permanent pool elevation. No construction trash or debris shall be allowed to be placed within the permanent pool. If the pond is used as a sediment control measure during active construction, the performance sureties will not be released until sediment has been cleaned out of the pond and elevations and grades have been reestablished as noted in the accepted plans.

Chapter Seven

EROSION CONTROL PRACTICES AND CONSTRUCTION PHASE BMPs

The requirements contained in this chapter are intended to prevent stormwater pollution resulting from soil erosion and sedimentation or from mishandling of solid and hazardous waste. Practices and measures included herein should assure that no foreign substance, (e.g. sediment, construction debris, chemicals) be transported from a site and allowed to enter any drainageway, whether intentionally or accidentally, by machinery, wind, rain, runoff, or other means.

A. POLLUTANTS OF CONCERN DURING CONSTRUCTION

The major pollutant of concern during construction is sediment. Natural erosion processes are accelerated at a project site by the construction process for a number of reasons, including the loss of surface vegetation and compaction damage to the soil structure itself, resulting in reduced infiltration and increased surface runoff. Clearing and grading operations also expose subsoils which are often poorly suited to re-establish vegetation, leading to longer term erosion problems.

Problems associated with construction site erosion include: transport of pollutants attached to transported sediment; increased turbidity (reduced light) in receiving waters; recreational use impairment. The deposited sediment may pose direct toxicity to wildlife, or smother existing spawning areas and habitat. This siltation also reduces the capacity of waterways, resulting in increased flood hazards to the public.

Other pollutants of concern during the construction process are hazardous wastes or hydrocarbons associated with the construction equipment or processes. Examples include concrete washoff, paints, solvents, and hydrocarbons from refueling operations. Poor control and handling of toxic construction materials pose an acute (short-term) or chronic (long-term) risk of death to both aquatic life, wildlife, and the general public.

B. EROSION AND SEDIMENT CONTROL REQUIREMENTS

The following principles should govern erosion and sediment control practices on all sites:

1. Sediment-laden water flowing from the site shall be detained by erosion control measures appropriate to minimize sedimentation.

2. Water shall not be discharged in a manner that causes erosion at or downstream of the point of discharge.

3. All access to building sites that cross a natural watercourse, drainage easement, or swale/channel shall have a culvert of appropriate size.

4. Wastes or unused building materials, including but not limited to garbage, debris, cleaning wastes, wastewater, toxic materials, and hazardous substances, shall not be carried by runoff from a site. All wastes shall be disposed of in a proper manner. No construction trash or debris shall be allowed to be placed within the permanent pool of the detention/retention ponds. If the pond is used as a sediment control measure during active construction, the performance sureties will not be released until sediment has been cleaned out of the pond and elevations and grades have been reestablished as noted in the accepted plans.

5. Sediment being tracked from a site onto public or private roadways shall be minimized. This can be accomplished initially by a temporary gravel construction entrance, in addition to a well-planned layout of roads, access drives, and parking areas.

6. Public or private roadways shall be kept cleared of accumulated sediment. Bulk clearing of sediment shall not include flushing the area with water.

7. All storm drain inlets shall be protected against sedimentation with barriers meeting accepted criteria, standards and specifications.

8. Runoff passing through a site from adjacent areas shall be controlled by diverting it around disturbed areas, where practical. Diverted runoff shall be conveyed in a manner that will not erode the channel and receiving areas. Alternatively, the existing channel may be left undisturbed or improved to prevent erosion or sedimentation from occurring.

9. Drainageways and swales shall be designed and adequately protected so that their final gradients and resultant velocities will not cause channel or outlet scouring.

10. All disturbed ground left inactive for fifteen (15) or more days shall be stabilized by seeding, sodding, mulching, covering, or by other equivalent erosion control measures.

11. Appropriate sediment control practices shall be installed prior to any land disturbance and thereafter whenever necessary.

12. During the period of construction activity at a site, erosion control measures necessary to meet the requirements of this Ordinance shall be maintained by the applicant.

C. COMMON CONTROL PRACTICES

All erosion control and stormwater pollution prevention measures required to comply with this Ordinance shall meet the design criteria, standards, and specifications similar to or the same as those outlined in the “Indiana Drainage Handbook” and “Indiana Handbook for Erosion Control

in Developing Areas", both published by the Indiana Department of Natural Resources, or other comparable and reputable references. Table 7-1 lists some of the more common and effective practices for preventing stormwater pollution from construction sites. Details of each practice can be found in the Indiana Drainage Handbook, the Indiana Handbook for Erosion Control in Developing Areas, or in Appendix C. These practices should be used to protect ***every*** potential pollution pathway to stormwater conveyances.

Table 7-1
Common Stormwater Pollution Control Practices for Construction Sites

Practice No.	BMP Description	Applicability	Fact Sheet
1	Site Assessment	All sites	2
2	Construction Sequencing	All sites	CN - 101
3	Tree Preservation and Protection	Nearly all sites	1
4	Temporary Gravel Construction Entrance Pad	All sites	1
5	Wheel Wash	All sites	CN - 102
6	Silt Fence	Small drainage areas	1
7	Surface Roughening	Sites with slopes that are to be stabilized with vegetation	1
8	Temporary Seeding	Areas of bare soil where additional work is not scheduled to be performed for a minimum of 15 days	1
9	Mulching	Temporary surface stabilization	1
10	Erosion Control Blanket (Surface)	Temporary surface stabilization, anchor for mulch	1
11	Temporary Diversion	Up-slope and down-slope sides of construction site, above disturbed slopes within construction site	1
12	Rock Check Dam	2 acres maximum contributing drainage area	1
13	Temporary Slope Drain	Sites with cut or fill slopes	1
14	Straw Bale Dam	Small drainage areas	1
15	Fabric Drop Inlet Protection	1 acre maximum contributing drainage area	1
16	Basket Curb Inlet Protection	1 acre maximum contributing drainage area	1
17	Sandbag Curb Inlet Protection	1 acre maximum contributing drainage area	1
18	Temporary Sediment Trap	5 acre maximum contributing drainage area	1
19	Temporary Sediment Basin	30 acre maximum contributing drainage area	1
20	Dewatering Structure	Sites requiring dewatering	CN - 103
21	Dust Control	All sites	1
22	Spill Prevention and Control	All sites	CN - 104
23	Solid Waste Management	All sites	CN - 105
24	Hazardous Waste Management	All sites	CN - 106

Fact sheet Location: 1. Indiana Handbook for Erosion Control in Developing Areas, 1992 or later
2. Indiana Drainage Handbook, 1999 or later

D. INDIVIDUAL LOT CONTROLS

Although individual lots within a larger development may not appear to contribute as much sediment as the overall development, the cumulative effect of lot development is of concern. From the time construction on an individual lot begins, until the individual lot is stabilized, the builder must take steps to:

- protect adjacent properties from sedimentation
- prevent mud/sediment from depositing on the street
- protect drainageways from erosion and sedimentation
- prevent sediment laden water from entering storm sewer inlets.

This can be accomplished using numerous erosion and sediment control measures. A standard erosion control plan for individual lots is provided in Appendix B. The standard plan includes perimeter silt fence, stabilized construction entrance, curb inlet protection, drop inlet protection, stockpile containment, stabilized drainage swales, downspout extensions, temporary seeding and mulching, and permanent vegetation. Every relevant measure should be installed at each individual lot site.

Construction sequence on individual lots should be as follows:

1. Clearly delineate areas of trees, shrubs, and vegetation that are to be undisturbed. To prevent root damage, the areas delineated for tree protection should be at least the same diameter as the crown.
2. Install perimeter silt fence at construction limits. Position the fence to intercept runoff prior to entering drainage swales.
3. Avoid disturbing drainage swales if vegetation is established. If drainage swales are bare, install erosion control blankets or sod to immediately stabilize.
4. Install drop inlet protection for all inlets on the property.
5. Install curb inlet protection, on both sides of the road, for all inlets along property frontage and the along the frontage of adjacent lots.
6. Install gravel construction entrance that extends from the street to the building pad.
7. Perform primary grading operations.
8. Contain erosion from any soil stockpiles created on-site with silt fence around the base.
9. Establish temporary seeding and straw mulch on disturbed areas.
10. Construct the home and install utilities.
11. Install downspout extenders once the roof and gutters have been constructed. Extenders should outlet to a stabilized area.
12. Re-seed any areas disturbed by construction and utilities installation with temporary seed mix within 3 days of completion of disturbance.
13. Grade the site to final elevations.
14. Install permanent seeding or sod.

All erosion and sediment control measures must be properly maintained throughout construction. Temporary and permanent seeding should be watered as needed until established. For further information on individual lot erosion and sediment control, please see the “Individual Lot Erosion and Sediment Control Plan and Certification” form in Appendix B or the IDNR, Division of Soil Conservation’s pamphlet titled “Erosion and Sediment control for Individual Building Sites”.

Chapter Eight

POST-CONSTRUCTION WATER QUALITY BMPs

A. INTRODUCTION

The Town of Griffith has adopted a policy that the control of stormwater runoff quality will be based on the management of Total Suspended Solids (TSS). This requirement is being adopted as the basis of the Town of Griffith stormwater quality management program for all areas of jurisdiction.

This section of the manual establishes minimum standards for the selection and design of construction water quality BMPs. The information provided in this chapter establishes performance criteria for stormwater quality management and procedures to be followed when preparing a BMP plan for compliance. Post-Construction BMPs must be sized to treat the water quality volume, WQv, for detention-based BMPs or the water quality discharge, Qwq, for flow-through BMPs. Chapter 9 provides the methodology for calculating the WQv and Qwq values.

BMPs noted in this chapter refer to post-construction BMPs, which continue to treat stormwater after construction has been completed and the site has been stabilized. Installing certain BMPs, such as bioretention areas and sand filters, prior to stabilization can cause failure of the measure due to clogging from sediment. If such BMPs are installed prior to site stabilization, they should be protected by traditional erosion control measures.

Conversely, detention ponds and other BMPs can be installed during construction and used as sediment control measures. In those instances, the construction sequence must require that the pond is cleaned out with pertinent elevations and storage and treatment capacities reestablished as noted in the accepted stormwater management plan.

B. INNOVATIVE BMPs

BMPs not previously accepted by the Town of Griffith must be certified by a professional engineer licensed in State of Indiana and accepted through the Town of Griffith. ASTM standard methods must be followed when verifying performance of new measures. New BMPs, individually or in combination, must meet the 80% TSS removal rate at 50-125 micron range (silt/fine sand) without reintrainment and must have a low to medium maintenance requirement to be considered by the Town. Testing to establish the TSS removal rate must be conducted by an independent testing facility, not the BMP manufacturer.

C. PRE-APROVED BMPs

The Town of Griffith has designated 12 pre-approved BMP methods to be used alone or in combination to achieve the 80% TSS removal stormwater quality goals for a given project. These BMP measures are listed along with their anticipated average TSS removal rates in **Table**

8-1. Pre-approved BMPs have been proven/are assumed to achieve the average TSS removal rates indicated in Table 8-1. Applicants desiring to use a different TSS removal rate for these BMPs must follow the requirements discussed above for Innovative BMPs. Details regarding the applicability and design of these pre-approved BMPs are contained within fact sheets presented in **Appendix D**.

Note that a single BMP measure may not be adequate to achieve the water quality goals for a project. It is for this reason that a "treatment train", a number of BMPs in series, is often required for a project.

TABLE 8-1
Pre-approved Post-construction BMPs

BMP Description	Anticipated Average % TSS Removal Rate[E]
Bioretention[A]	75
Constructed Wetland	65
Underground detention	70
Extended Dry Detention[B]	72
Infiltration Basin[A]	87
Infiltration Trench[A]	87
Media Filtration – Underground Sand	80
Media Filtration – Surface Sand	83
Storm Drain Insert[D]	NA[C]
Filter Strip	48
Vegetated Swale	60
Wet Detention	80

Notes:

A. Based on capture of 0.5-inch of runoff volume as best available data. Effectiveness directly related to captured runoff volume, increasing with larger capture volumes.
B. Test results are for three types of ponds: extended wet detention, wet pond and extended dry detention
C. NA may indicate that the BMP is not applicable for the pollutant, but may also indicate that the information is simply Not Available. Independent testing should be provided, rather than the manufacturer's testing data.
D. Must provide vendor data for removal rates.
E. Removal rates shown are based on typical results. These rates are also dependent on proper installation and maintenance. The ultimate responsibility for determining whether additional measures must be taken to meet the Ordinance requirements for site-specific conditions rests with the applicant.

REFERENCES

1. Bell, W., L. Stokes, L.J. Gavan, T.N. Nguyen. 1995. *Assessment of the Pollutant Removal Efficiencies of Delaware Sand Filter BMPs*. City of Alexandria, Department of Transportation and Environmental Services, Alexandria, VA.

2. City of Austin. 1990. *Removal Efficiencies of Stormwater Control Structures*. Environmental Resources Management Division, Environmental and Conservation Services Department, City of Austin, Austin, TX.

3. City of Austin. 1995 (draft). *Characterization of Stormwater Pollution for the Austin, Texas Area*. Environmental Resources Management Division, Environmental and Conservation Services Department, City of Austin, Austin, TX.

4. Claytor, R.A., and T.R. Schueler. 1996. *Design of Stormwater Filtering Systems*. The Center for Watershed Protection, Silver Spring, MD.

5. Gain, S.W. 1996. *The Effects of Flow-Path Modifications on Urban Water-Quality Constituent Retention in Urban Stormwater Detention Pond and Wetland System, Orlando, Florida*. Florida Department of Transportation, Orlando, FL.

6. Harper, H.H., and J.L. Herr. 1993. *Treatment Efficiencies of Detention with Filtration Systems*. Environmental Research and Design, Inc., Orlando, FL.

7. Horner, R.R., and C.R. Horner. 1995. *Design, Construction, and Evaluation of a Sand Filter Stormwater Treatment System, Part II, Performance Monitoring*. Report to Alaska Marine Lines, Seattle, WA.

8. Khan, Z., C. Thrush, P. Cohen, L. Kulzer, R. Franklin, D. Field, J. Koon, and R. Horner. 1992. *Biofiltration Swale Performance, Recommendations, and Design Considerations*. Municipality of Metropolitan Seattle, Water Pollution Control Department, Seattle, WA.

9. Martin, E.H., and J.L. Smoot. 1986. *Constituent-Load Changes in Urban Stormwater Runoff Routed Through aDetention Pond - Wetlands Systems in Central Florida*. U.S. Geological Survey Water Resources Investigations Report 85-4310. Tallahassee, FL.

10. Prince George's County. 1993. *Design Manual for Use of Bioretention in Stormwater Management*. Department of Environmental Resources, Prince George's County, Landover, MD.

11. USEPA. 1993. *Guidance Specifying Management Measures for Sources of Nonpoint Pollution in Coastal Waters*. EPA-840-B-92-002. U.S. Environmental Protection Agency (USEPA), Office of Water, Washington, DC.

12. Welborn, C., and J. Veenhuis. 1987. *Effects of Runoff Control on the Quality and Quantity of Urban Runoff in Two Locations in Austin, TX*. USGS Water Resources Investigations Report 87-4004.

13. Young, G.K., S. Stein, P. Cole, T. Kammer, F. Graziano, and F. Bank. 1996. *Evaluation and Management of Highway Runoff Water Quality*. FHWA-PD-96-032, Federal Highway Administration.

14. Yousef, Y.A., M.P. Wanielista, and H.H. Harper. 1985. Removal of Highway Contaminants by Roadside Swales. *Transportation Research Record* 1017:62-68.

15. Yu, S.L., and D.E. Benelmouffok. 1988. Field Testing of Selected Urban BMPs in Critical Water Issues and Computer Applications. In *Proceedings of the 15th Annual Water Resources Conference*. American Society of Civil Engineers, New York, NY.

16. Yu, S.L., S.L. Barnes, and V.W. Gerde. 1993. *Testing of Best Management Practices for Controlling HighwayRunoff*. Virginia Department of Transportation, Report No. FHWA/VA-93-R16, Richmond, VA.

17. Yu, S.L., and R.J. Kaighn. 1992. *VDOT Manual of Practice for Planning Stormwater Management*. Federal Highway Administration, FHWA/VA-92-R13, Virginia Department of Transportation, Virginia Transportation Research Council, Charlottesville, VA.

18. Yu, S.L., and R.J. Kaighn. 1995. *The Control of Pollution in Highway Runoff Through Biofiltration. Volume II: Testing of Roadside Vegetation*. Virginia Department of Transportation, Report No. FHWA/VA-95-R29, Richmond, VA.

19. Yu, S.L., R.J. Kaighn, and S.L. Liao. 1994. *Testing of Best Management Practices for Controlling Highway Runoff, Phase II*. Virginia Department of Transportation, Report No. FHWA/VA-94-R21, Richmond, VA.

Chapter Nine

METHODOLOGY FOR DETERMINATION OF REQUIRED SIZING OF BMPs

A. INTRODUCTION

Structural Water Quality BMPs are divided into two major classifications: detention BMPs and Flow-through BMPs. Detention BMPs impound (pond) the runoff to be treated, while flow through BMPs treat the runoff through some form of filtration process.

B. DETENTION BMP SIZING

Water Quality Detention BMPs must be designed to store the water quality volume for treatment. The water quality volume, WQv, is the storage needed to capture and treat the runoff from the first one inch of rainfall. The water quality volume is equivalent to one inch of rainfall multiplied by the volumetric runoff coefficient (Rv) multiplied by the site area, or:

$$\mathbf{WQv = \frac{(P)\,(Rv)\,(A)}{12}}$$

where:
WQv = water quality volume (acre-feet)
P = 1 inch of rainfall
Rv = volumetric runoff coefficient
A = area in acres

The volumetric runoff coefficient is a measure of imperviousness for the contributing area, and is calculated as:

$$\mathbf{Rv = 0.05 + 0.009(I)}$$

Where:
I is the percent impervious cover

For example, a proposed commercial site will be designed to drain to three different outlets, with the following drainage areas and impervious percentages:

Subarea ID	On-site Contributing Area (acres)	Impervious Area %	Off-Site Contributing Area (acres)
A	7.5	80	0.0
B	4.3	75	0.0
C	6.0	77	0.0

Calculating the volumetric runoff coefficient for subareas A, B and C yields:

Rv (subarea A) = 0.05+0.009(80)=0.77
Rv (subarea B) = 0.05+0.009(75)=0.73
Rv (subarea C) = 0.05+0.009(77)=0.74

The water quality volumes for these three areas are then calculated as:

WQv (subarea A) = (1")(Rv)(A)/12=0.77(7.5)/12=0.48 acre-feet
WQv (subarea B) = 0.73(4.3)/12=0.26 acre-feet
WQv (subarea C) = 0.74(6.0)/12=0.37 acre-feet

Note that this example assumed no offsite sources of discharge through the water quality detention BMPs. If there were significant sources of off-site runoff (sometimes called runon for upstream areas draining to the site), the designer would have the option of diverting off-site runoff around the on-site systems, or the detention BMP should be sized to treat the water quality volume for the entire contributing area, including off-site sources.

C. FLOW THROUGH BMP SIZING

Flow through BMPs are designed to treat runoff at a peak design flow rate through the system. Examples of flow through BMPs include catch basin inserts, sand filters, and grassed channels. Another flow through BMP which is gaining popularity is a dynamic separator. Dynamic separators are proprietary, and usually include an oil-water separation component.

The following procedure should be used to estimate peak discharges for flow through BMPs (adopted from Maryland, 2000). It relies on the volume of runoff computed using the Small Storm Hydrology Method (Pitt, 1994) and utilizes the NRCS, TR-55 Method.

Using the WQv methodology, a corresponding Curve Number (CNwq) is computed utilizing the following equation:

$$CNwq = \frac{1000}{\left[10 + 5P + 10Qa - 10\sqrt{Qa^2 + 1.25QaP}\right]}$$

where:

CNwq = curve number for water quality storm event
P = 1” (rainfall for water quality storm event)
Qa = runoff volume, in inches = 1”×Rv = Rv (inches)
Rv=volumetric runoff coefficient (see previous section)

Due to the complexity of the above equation, the water quality curve number is represented as a function of percent imperviousness in **Figure 9-1**.

The water quality curve number, CNwq, is then used in conjunction with the standard calculated time-of-concentration, tc, and drainage area as the basis input for TR-55 calculations. Using the SCS Type II distribution for 1 inch of rainfall in 24-hours, the water quality treatment rate, Qwq, can then be calculated.

REFERENCES

1. Maryland Stormwater Design Manual, Volume II, Appendix D.10, 2000

2. Pitt, R., 1994, Small Storm Hydrology. University of Alabama - Birmingham. Unpublished manuscript. Presented at design of stormwater quality management practices. Madison, WI, May 17-19 1994.

3. Schueler, T.R. and R.A. Claytor, 1996, Design of Stormwater Filter Systems. Center for Watershed Protection, Silver Spring, MD.

4. United States Department of Agriculture (USDA), 1986. Urban Hydrology for Small Watersheds. Soil Conservation Service, Engineering Division. Technical Release 55 (TR-55).

Figure 9-1
Curve Number Calculation for Water Quality Storm Event

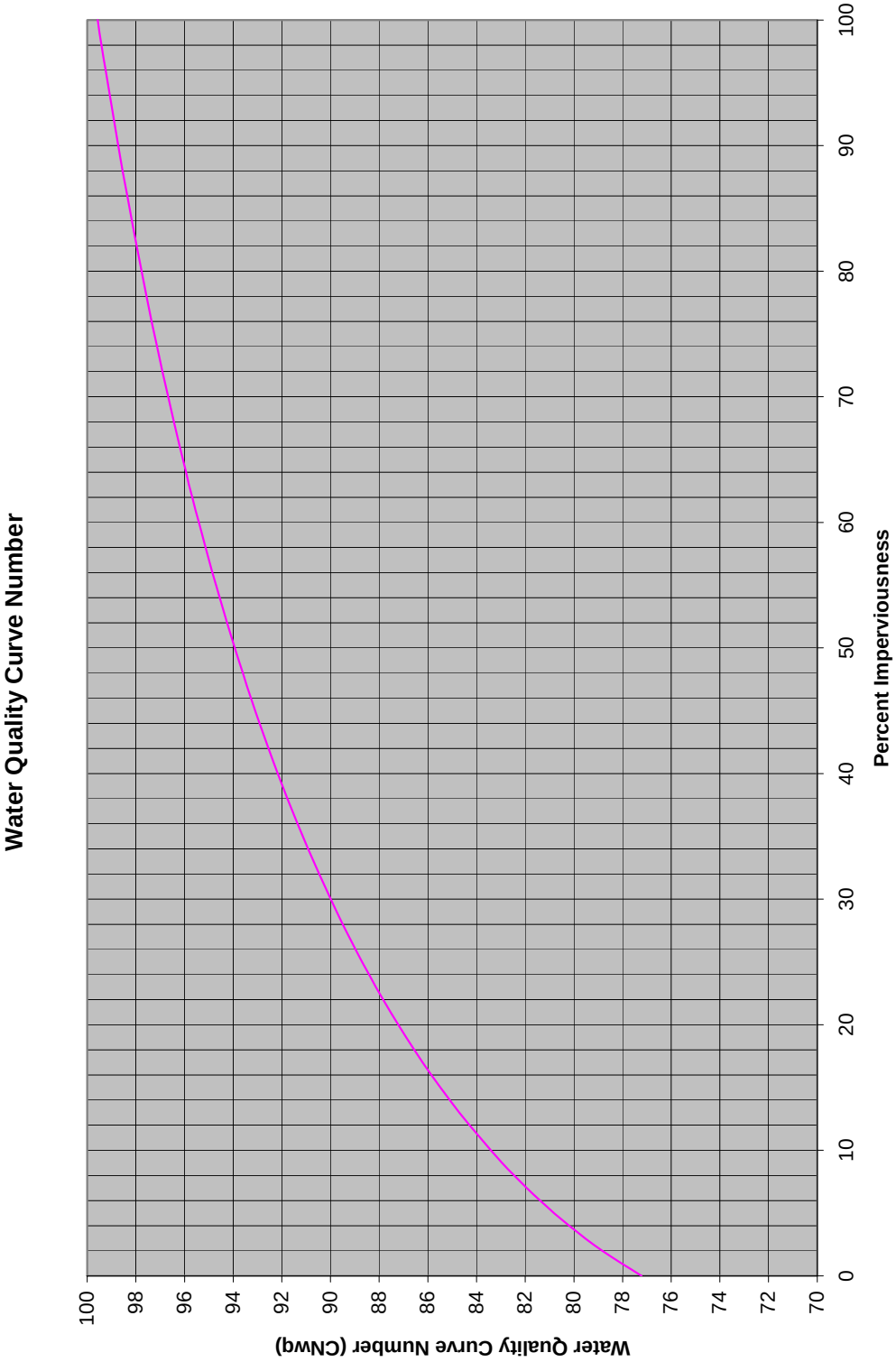

APPENDIX A

ABBREVIATIONS AND DEFINITIONS

APPENDIX A

ABBREVIATIONS AND DEFINITIONS

ABBREVIATIONS

BFE	Base Flood Elevation
BMP	Best Management Practice
CFS	Cubic Feet Per Second
CLOMR	Conditional Letter of Map Revision (from FEMA)
CLOMR-F	Conditional Letter of Map Revision Based on Fill (from FEMA)
CN	Curve Number
COE	United States Army Corps of Engineers
CSMP	Comprehensive Stormwater Management Program
CSO	Combined Sewer Overflow
CWA	Clean Water Act
ERM	Elevation Reference Mark
E&SC	Erosion and Sediment Control
EPA	Environmental Protection Agency
ETJ	Extraterritorial Jurisdiction
FBFM	Flood Boundary and Floodway Map
FEMA	Federal Emergency Management Agency
FHBM	Flood Hazard Boundary Map
FIRM	Flood Insurance Rate Map
FIS	Flood Insurance Study
FPG	Flood Protection Grade
FPS	Feet Per Second
GIS	Geographical Information System
GPS	Global Positioning System
HGL	Hydraulic Grade Line

HHW	Household Hazardous Waste
HUC	Hydrologic Unit Code
IDEM	Indiana Department of Environmental Management
IDNR	Indiana Department of Natural Resources
INDOT	Indiana Department of Transportation.
LAG	Lowest Adjacent Grade
LOMA	Letter of Map Amendment (from FEMA)
LOMR	Letter of Map Revision (from FEMA)
LOMR-F	Letter of Map Revision Based on Fill (from FEMA)
MCM	Minimum Control Measure
MS4	Municipal Separate Storm Sewers
NAVD	North American Vertical Datum of 1988
NFIP	National Flood Insurance Program
NGVD 1929	National Geodetic Vertical Datum of 1929
NRCS	USDA-Natural Resources Conservation Service
NPDES	National Pollution Discharge Elimination System
NPS	Non-point source
POTW	Publicly Owned Treatment Works
SFHA	Special Flood Hazard Area
SWCD	Soil and Water Conservation District
SWPPP	Stormwater Pollution Prevention Plan
SWQMP	Stormwater Quality Management Plan
Tc	Time of Concentration
TMDL	Total Maximum Daily Load
USCS	Unified Soil Classification System
USDA	United States Department of Agriculture
USFWS	United States Fish and Wildlife Service

DEFINITIONS

Acre-Foot (AF). A measure of water volume equal to the inundation of a flat one-acre area to a dept of one foot (43,560 cubic feet).

Administering authority. The designated unit of government given the authority to issue permits.

Agricultural land disturbing activity. Tillage, planting, cultivation, or harvesting operations for the production of agricultural or nursery vegetative crops. The term also includes pasture renovation and establishment, the construction of agricultural conservation practices, and the installation and maintenance of agricultural drainage tile. For purposes of this rule, the term does not include land disturbing activities for the construction of agricultural related facilities, such as barns, buildings to house livestock, roads associated with infrastructure, agricultural waste lagoons and facilities, lakes and ponds, wetlands; and other infrastructure.

Agricultural land use conservation practices. Use of land for the production of animal or plant life, including forestry, pasturing or yarding of livestock, and planting, growing, cultivating, and harvesting crops for human or livestock consumption. Practices that are constructed on agricultural land for the purposes of controlling soil erosion and sedimentation. These practices include grass waterways, sediment basins, terraces, and grade stabilization structures.

Amortization Period. The length of time used to repay a debt or mortgage or to depreciate an initial cost.

Antecedent Runoff Condition. The index of runoff potential before a storm event. The index, developed by the Soil Conservation Service (SCS), is an attempt to account for the variation of the SCS runoff curve number (CN) from storm to storm.

Backflow Preventer. Device that allows liquids to flow in only one direction in a pipe. Backflow preventers are used on sewer pipes to prevent a reverse flow during flooding situations.

Backwater. The rise in water surface elevation caused by some obstruction such as a narrow bridge opening, buildings or fill material that limits the area through which the water shall flow.

Base Flood Elevation. The water surface elevation corresponding to a flood having a one percent probability of being equaled or exceeded in a given year.

Base Flood. See "Regulatory Flood".

Base Flow. Stream discharge derived from groundwater sources as differentiated from surface runoff. Sometimes considered to include flows from regulated lakes or reservoirs.

Basement. A building story that is all or partly underground but having at least one-half of its height below the average level of the adjoining ground. A basement shall not be counted as a story for the purpose of height regulations.

Benchmark. A marked point of known elevation from which other elevations may be established.

Best Management Practices. Design, construction, and maintenance practices and criteria for stormwater facilities that minimize the impact of stormwater runoff rates and volumes, prevent erosion, and capture pollutants.

Buffer Strip. An existing, variable width strip of vegetated land intended to protect water quality and habitat.

Building. See “structure”.

Capacity of a Storm Drainage Facility. The maximum flow that can be conveyed or stored by a storm drainage facility without causing damage to public or private property.

Catch Basin. A chamber usually built at the curb line of a street for the admission of surface water to a storm drain or subdrain, having at its base a sediment sump designed to retain grit and detritus below the point of overflow.

Centerline of Channel. The thalweg of a channel.

Channel Improvement. Alteration, maintenance, or reconstruction of the channel area for the purpose of improving the channel capacity or overall drainage efficiency. The noted "improvement" does not necessarily imply water quality or habitat improvement within the channel or its adjacent area.

Channel Modification. Alteration of a channel by changing the physical dimensions or materials of its bed or banks. Channel modification includes damming, rip-rapping or other armoring, widening, deepening, straightening, relocating, lining, and significant removal of bottom or woody vegetation. Channel modification does not include the clearing of dead or dying vegetation, debris, or trash from the channel. Channelization is a severe form of channel modification typically involving relocation of the existing channel (e.g., straightening).

Channel Stabilization. Protecting the sides and bed of a channel from erosion by controlling flow velocities and flow directions using jetties, drops, or other structures and/or by fining the channel with vegetation, riprap, concrete, or other suitable lining material.

Channel. A portion of a natural or artificial watercourse which periodically or continuously contains moving water, or which forms a connecting link between two bodies of water. It has a defined bed and banks which serve to confine the water.

Class V injection well. A type of well, which typically has a depth greater than its largest surface dimension, emplaces fluids into the subsurface, and does not meet the definitions of Class I through Class IV wells as defined under 40 CFR 146.5. While the term includes the specific examples described in 40 CFR 144.81, septic systems that serve more than one (1) single-family dwelling or provide service for non-domestic waste, dug wells, bored wells, improved sinkholes, french drains, infiltration sumps, and infiltration galleries, it does not include surface impoundments, trenches, or ditches that are wider than they are deep.

Closed Conduit. A pipe, tube, or tile used for transmitting water.

Combined Sewer Overflow. A system designed and used to receive and transport combined sewage so that during dry periods the wastewater is carried to a treatment facility. During storm events, the excess water is discharged directly into a river, stream, or lake without treatment.

Compensatory Storage. An artificial volume of storage within a floodplain used to balance the loss of natural flood storage capacity when artificial fill or substructures are placed within the floodplain.

Compost. Organic residue (or a mixture of organic residue and soil) that has undergone biological decomposition until it has become relatively stable humus.

Comprehensive Stormwater Management Program. A comprehensive stormwater program for effective management of stormwater quantity and quality throughout the community.

Constructed Wetland. A manmade shallow pool that creates growing conditions suitable for wetland vegetation and is designed to maximize pollutant removal.

Construction activity. Land disturbing activities, and land disturbing activities associated with the construction of infrastructure and structures. This term does not include routine ditch or road maintenance or minor landscaping projects.

Construction plan. A representation of a project site and all activities associated with the project. The plan includes the location of the project site, buildings and other infrastructure, grading activities, schedules for implementation and other pertinent information related to the project site. A storm water pollution prevention plan is a part of the construction plan.

Construction site access. A stabilized stone surface at all points of ingress or egress to a project site, for the purpose of capturing and detaining sediment carried by tires of vehicles or other equipment entering or exiting the project site.

Contiguous. Adjoining or in actual contact with.

Contour Line. Line on a map which represents a contour or points of equal elevation.

Contour. An imaginary line on the surface of the earth connecting points of the same elevation.

Contractor or subcontractor. An individual or company hired by the project site or individual lot owner, their agent, or the individual lot operator to perform services on the project site.

Control Structure. A structure designed to control the rate of flow that passes through the structure, given a specific upstream and downstream water surface elevation.

Conveyance. Any structural method for transferring stormwater between at least two points. The term includes piping, ditches, swales, curbs, gutters, catch basins, channels, storm drains, and roadways.

Convolution. The process of translating precipitation excess into a runoff hydrograph.

Crawl Space. Low space below first floor of a house where there has not been excavation deep enough for a basement, usually less than seven (7) feet in depth, but where there is access for pipes, ducts, utilities and similar equipment.

Critical Duration Analysis. The process of testing different rainfall durations to find that “critical duration”, which produces the highest peak runoff or the highest storage volume.

Cross-Section. A graph or plot of ground elevation across a stream valley or a portion of it, usually along a line perpendicular to the stream or direction of flow.

Crown of Pipe. The elevation of top of pipe.

Cubic Feet Per Second (CFS). Used to describe the amount of flow passing a given point in a stream channel. One cubic foot per second is equivalent to approximately 7.5 gallons per second.

Culvert. A closed conduit used for the conveyance of surface drainage water under a roadway, railroad, canal or other impediment.

Curve Number (CN). The Soil Conservation Service index that represents the combined hydrologic effect of soil, land use, land cover, hydrologic condition and antecedent runoff condition.

Dam. A barrier to confine or impound water for storage or diversion, to prevent gully erosion, or to retain soil, sediment, or other debris.

Damage. Measurable rise in flood heights on buildings currently subject to flooding, flooding of buildings currently not subject to flooding and increases in volume or velocity to the point where the rate of land lost to erosion and scour is substantially increased.

Datum. Any level surface to which elevations are referred, usually Mean Sea Level.

Dechlorinated swimming pool discharge. Chlorinated water that has either sat idle for seven (7) days following chlorination prior to discharge to the MS4 conveyance, or, by analysis, does not contain detectable concentrations (less than five-hundredths (0.05) milligram per liter) of chlorinated residual.

Depressional Storage Areas. Non-riverine depressions in the earth where stormwater collects. The volumes are often referred to in units of acre-feet.

Design Storm. A selected storm event, described in terms of the probability of occurring once within a given number of years, for which drainage or flood control improvements are designed and built.

Detention Basin. A facility constructed or modified to restrict the flow of storm water to a prescribed maximum rate, and to detain concurrently the excess waters that accumulate behind the outlet.

Detention Facility. A facility designed to detain a specified amount of stormwater runoff assuming a specified release rate. The volumes are often referred to in units of acre-feet.

Detention Storage. The temporary detaining of storage of stormwater in storage facilities, on rooftops, in streets, parking lots, school yards, parks, open spaces or other areas under predetermined and controlled conditions, with the rate of release regulated by appropriately installed devices.

Detention Time. The theoretical time required to displace the contents of a tank or unit at a given rate of discharge (volume divided by rate of discharge).

Detention. Managing stormwater runoff by temporary holding and controlled release.

Detritus. Dead or decaying organic matter; generally contributed to stormwater as fallen leaves and sticks or as dead aquatic organisms.

Developer. Any person financially responsible for construction activity, or an owner of property who sells or leases, or offers for sale or lease, any lots in a subdivision.

Development. Any man-made change to improved or unimproved real estate including but not limited to:

1. Construction, reconstruction, or placement of a building or any addition to a building;
2. Construction of flood control structures such as levees, dikes, dams or channel improvements;
3. Construction or reconstruction of bridges or culverts;
4. Installing a manufactured home on a site, preparing a site for a manufactured home, or installing a recreational vehicle on a site for more than hundred eight (180) days;
5. Installing utilities, erection of walls, construction of roads, or similar projects;
6. Mining, dredging, filling, grading, excavation, or drilling operations;

7. Storage of materials; or

8. Any other activity that might change the direction, height, or velocity of flood or surface waters.

"Development" does not include activities such as the maintenance of existing buildings and facilities such as painting, re-roofing, resurfacing roads, or gardening, plowing and similar agricultural practices that do not involve filling, grading, excavation, or the construction of permanent buildings.

Direct Release. A method of stormwater management where runoff from a part or the entire development is released directly to the receiving stream without providing detention.

Discharge. Usually the rate of water flow. A volume of fluid passing a point per unit time commonly expressed as cubic feet per second, cubic meters per second, gallons per minute, or millions of gallons per day.

Disposal. The discharge, deposit, injection, spilling, leaking, or placing of any solid waste or hazardous waste into or on any land or water so that the solid waste or hazardous waste, or any constituent of the waste, may enter the environment, be emitted into the air, or be discharged into any waters, including

Ditch. A man-made, open drainageway in or into which excess surface water or groundwater drained from land, stormwater runoff, or floodwaters flow either continuously or intermittently.

Drain. A buried slotted or perforated pipe or other conduit (subsurface drain) or a ditch (open drain) for carrying off surplus groundwater or surface water.

Drainage Area. The area draining into a stream at a given point. It may be of different sizes for surface runoff, subsurface flow and base flow, but generally the surface runoff area is considered as the drainage area.

Drainage Classification (soil). As a natural condition of the soil, drainage refers to both the frequency and duration of periods when the soil is free of saturation. Soil drainage conditions are defined as:

- *Well-drained*--Excess water drains away rapidly, and no mottling occurs within 36 in. of the surface.
- *Moderately well drained*--Water is removed from the soil somewhat slowly resulting in small but significant periods of wetness, and mottling occurs between 18 and 36 in.
- *Poorly drained*--Water is removed so slowly that it is wet for a large part of the time, and mottling occurs between 0 and 8 in.
- *Somewhat poorly drained*--Water is removed from the soil slowly enough to keep it wet for significant periods but not all of the time, and mottling occurs between 8 to 18 in.
- *Very poorly drained*--Water is removed so slowly that the water table remains at or near the surface for the greater part of the time; there may also be periods of surface ponding; the soil has a black to gray surface layer with mottles up to the surface.

Drainage. The removal of excess surface water or groundwater from land by means of ditches or subsurface drains. Also see Natural drainage.

Drop Manhole. Manhole having a vertical drop pipe connecting the inlet pipe to the outlet pipe. The vertical drop pipe shall be located immediately outside the manhole.

Dry Well. A type of infiltration practice that allows stormwater runoff to flow directly into the ground via a bored or otherwise excavated opening in the ground surface.

Dry-Bottom Detention Basin. A basin designed to be completely dewatered after having provided its planned detention of runoff during a storm event.

Duration. The time period of a rainfall event.

Earth Embankment. A man-made deposit of soil, rock, or other material often used to form an impoundment.

Elevation Certificate. A form published by the Federal Emergency Management Agency that is used to certify the 100-year or base flood elevation and the lowest elevation of usable space to which a building has been constructed.

Elevation Reference Mark (ERM). Elevation benchmark tied to the National Geodetic Vertical Datum of 1929 and identified during the preparation of a Flood Insurance Study prepared for the Federal Emergency Management Agency.

Emergency Spillway. Usually a vegetated earth channel used to safely convey flood discharges around an impoundment structure.

Energy Dissipater. A device to reduce the energy of flowing water.

Environment. The sum total of all the external conditions that may act upon a living organism or community to influence its development or existence.

Erosion and sediment control measure. A practice, or a combination of practices, to control erosion and resulting sedimentation. and/or off-site damages.

Erosion and sediment control system. The use of appropriate erosion and sediment control measures to minimize sedimentation by first reducing or eliminating erosion at the source and then as necessary, trapping sediment to prevent it from being discharged from or within a project site.

Erosion control plan. A written description and site plan of pertinent information concerning erosion control measures designed to meet the requirements of this Ordinance.

Erosion. The wearing away of the land surface by water, wind, ice, gravity, or other geological agents. The following terms are used to describe different types of water erosion:

- *Accelerated erosion*--Erosion much more rapid than normal or geologic erosion, primarily as a result of the activities of man.

- *Channel erosion* --An erosion process whereby the volume and velocity of flow wears away the bed and/or banks of a well-defined channel.

- *Gully erosion* --An erosion process whereby runoff water accumulates in narrow channels and, over relatively short periods, removes the soil to considerable depths, ranging from 1-2 ft. to as much as 75-100 ft.

- *Rill erosion*--An erosion process in which numerous small channels only several inches deep are formed; occurs mainly on recently disturbed and exposed soils (see Rill).

- *Splash erosion*--The spattering of small soil particles caused by the impact of raindrops on wet soils; the loosened and spattered particles may or may not be subsequently removed by surface runoff.

- *Sheet erosion*--The gradual removal of a fairly uniform layer of soil from the land surface by runoff water.

Extraterritorial Jurisdiction (ETJ). Areas located outside the corporate limits of a community over which the community has statutory development authority.

Farm or Field Tile. A pipe installed in an agricultural area to allow subsurface drainage of farmland for the purpose of agricultural production.

FEMA. The Federal Emergency Management Agency.

Filter Strip. Usually a long, relatively narrow area (usually, 20-75 feet wide) of undisturbed or planted vegetation used near disturbed or impervious surfaces to filter stormwater pollutants for the protection of watercourses, reservoirs, or adjacent properties.

Final stabilization. The establishment of permanent vegetative cover or the application of a permanent nonerosive material to areas where all land disturbing activities have been completed and no additional land disturbing activities are planned under the current permit.

Floatable. Any solid waste that will float on the surface of the water.

Flood (or Flood Waters). A general and temporary condition of partial or complete inundation of normally dry land areas from the overflow, the unusual and rapid accumulation, or the runoff of surface waters from any source.

Flood Boundary and Floodway Map (FBFM). A map prepared by the Federal Emergency Management Agency the depicts the FEMA designated floodways within a community. This map also includes delineation of the 100-year and 500-year floodplain boundaries and the location of the Flood Insurance Study cross-sections.

Flood Crest. The maximum stage or elevation reached or expected to be reached by the waters of a specific flood at a given time.

Flood Duration. The length of time a stream is above flood stage or overflowing its banks.

Flood Easement. Easement granted to identify areas inundated by the 100-year flood and prohibit or severely restrict development activities.

Flood Elevation. The elevation at all locations delineating the maximum level of high waters for a flood of given return period.

Flood Fighting. Actions taken immediately before or during a flood to protect human life and to reduce flood damages such as evacuation, emergency sandbagging and diking.

Flood Forecasting. The process of predicting the occurrence, magnitude and duration of an imminent flood through meteorological and hydrological observations and analysis.

Flood Frequency. A statistical expression of the average time period between floods equaling or exceeding a given magnitude. For example, a 100-year flood has a magnitude expected to be equaled or exceeded on the average of once every hundred years; such a flood has a one-percent chance of being equaled or exceeded in any given year. Often used interchangeably with "recurrence interval".

Flood Hazard Area. Any floodplain, floodway, floodway fringe, or any combination thereof which is subject to inundation by the regulatory flood; or any flood plain as delineated by Zone X on a Flood Hazard Boundary Map.

Flood Hazard Boundary Map (FHBM). A map prepared by the Federal Emergency Management Agency that depicts Special Flood Hazard Areas as a Zone A within a community. There are no study text, base flood elevations, or floodways associated with this map.

Flood Insurance Rate Map (FIRM). A map prepared by the Federal Emergency Management Agency that depicts Special Flood Hazard Areas within a community. This map also includes the 100-year or Base Flood Elevation at various locations along the watercourses. More recent versions of the FIMR may also show the FEMA designated floodway boundaries and the location of the Flood Insurance Study cross-sections.

Flood Insurance Study (FIS). A study prepared by the Federal Emergency Management agency to assist a community participating in the National Flood Insurance Program in its application of the program regulations. The study consists of a text which contains community background information with respect to flooding, a floodway data table, summary of flood discharges, flood profiles, a Flood Insurance Rate Map, and a Flood Boundary and Floodway Map.

Flood Profile. A graph showing the relationship of water surface elevation to a specific location, the latter generally expressed as distance above the mouth of a stream of water flowing in a channel. It is generally drawn to show surface elevation for the crest or a specific magnitude of flooding, but may be prepared for conditions at any given time or stage.

Flood Protection Grade (FPG). The elevation of the regulatory or 100-year flood plus two (2) feet at any given location in the Special Flood Hazard Area or 100-year floodplain.

Flood Protection Grade. The elevation of the lowest floor of a building, including the basement, which shall be two feet above the elevation of the regulatory flood.

Flood Resistant Construction (Flood Proofing). Additions, changes or adjustments to structures or property that are designed to reduce or eliminate the potential for flood damage.

Flood Storage Areas. Depressions, basins, or other areas that normally stand empty or partially empty, but fill with rainfall runoff during storms to hold the runoff and reduce downstream flow rates. The volumes are often referred to in units or acre-feet.

Floodplain Management. The operation of a program of corrective and preventive measures for reducing flood damage, including but not limited to flood control projects, floodplain land use regulations, flood proofing of buildings, and emergency preparedness plans.

Floodplain Regulations. General term applied to the full range of codes, ordinances and other regulations relating to the use of land and construction within floodplain limits. The term encompasses zoning ordinances, subdivision regulations, building and housing codes, encroachment laws and open area (space) regulations.

Floodplain. The channel proper and the areas adjoining the channel which have been or hereafter may be covered by the regulatory or 100-year flood. Any normally dry land area that is susceptible to being inundated by water from any natural source. The floodplain includes both the floodway and the floodway fringe districts.

Floodway Fringe. That portion of the flood plain lying outside the floodway, which is inundated by the regulatory flood.

Floodway. The channel of a river or stream and those portions of the floodplains adjoining the channel which are reasonably required to efficiently carry and discharge the peak flow of the regulatory flood of any river or stream.

Footing Drain. A drain pipe installed around the exterior of a basement wall foundation to relieve water pressure caused by high groundwater elevation.

Forebay (or Sediment Forebay). A small pond placed in front of a larger retention/detention structure such as a wet pond, dry pond, or wetland to intercept and concentrate a majority of sediment that is coming into the system before it reaches the larger structure.

Freeboard. An increment of height added to the base flood elevation to provide a factor of safety for uncertainties in calculations, unknown local conditions, wave actions and unpredictable effects such as those caused by ice or debris jams. (See Flood Protection Grade).

French Drain. A drainage trench backfilled with a coarse, water-transmitting material; may contain a perforated pipe.

Gabion. An erosion control structure consisting of a wire cage or cages filled with rocks.

Garbage. All putrescible animal solid, vegetable solid, and semisolid wastes resulting from the processing, handling, preparation, cooking, serving, or consumption of food or food materials.

Geographical Information System. A computer system capable of assembling, storing, manipulation, and displaying geographically referenced information. This technology can be used for resource management and development planning.

Geotextile Fabric. A woven or non-woven, water-permeable synthetic material used to trap sediment particles, prevent the clogging of aggregates with fine grained soil particles, or as a separator under road aggregate.

Geotextile Liner. A synthetic, impermeable fabric used to seal impoundments against leaks.

Global Positioning System. A system that provides specially coded satellite signals that is processed by a receiver, which determines position, velocity, and time. The system is funded and controlled by the U.S. Department of Defense.

Grade. (1) The inclination or slope of a channel, canal, conduit, etc., or natural ground surface usually expressed in terms of the percentage the vertical rise (or fall) bears to the corresponding horizontal distance. (2) The finished surface of a canal bed, roadbed, top of embankment, or bottom of excavation; any surface prepared to a design elevation for the support of construction, such as paving or the laying of a conduit. (3) To finish the surface of a canal bed, roadbed, top of embankment, or bottom of excavation, or other land area to a smooth, even condition.

Grading. The cutting and filling of the land surface to a desired slope or elevation.

Grass. A member of the botanical family Graminae, characterized by blade-like leaves that originate as a sheath wrapped around the stem.

Grassed swale. A type of vegetative practice used to filter stormwater runoff via a vegetated, shallow-channel conveyance.

Grassed Waterway. A natural or constructed waterway, usually broad and shallow, covered with erosion-resistant grasses and used to conduct surface water from an area.

Ground Cover (horticulture). Low-growing, spreading plants useful for low-maintenance landscape areas.

Groundwater Recharge. The infiltration of water into the earth. It may increase the total amount of water stored underground or only replenish supplies depleted through pumping or natural discharge.

Groundwater. Accumulation of underground water, natural or artificial. The term does not include

Habitat. The environment in which the life needs of a plant or animal are supplied.

Hard Surface. See "Impervious Surface."

High Water. Maximum designed permitted, or regulated water level for an impoundment.

Household Hazardous Waste. Solid waste generated by households that is ignitable, toxic, reactive, corrosive, or otherwise poses a threat to human health or the environment.

Hydraulic Grade Line (HGL). For Channel flow, the HGL is equal to the water surface whereas for pressure flow it is the piezometric surface.

Hydraulics. A branch of science that deals with the practical application of the mechanics of water movement. A typical hydraulic study is undertaken to calculate water surface elevations.

Hydrodynamic Loads. Forces imposed on structures by floodwaters due to the impact of moving water on the upstream side of the structure, drag along its sides, and eddies or negative pressures on its downstream side.

Hydrograph. For a given point on a stream, drainage basin, or a lake, a graph showing either the discharge, stage (depth), velocity, or volume of water with respect to time.

Hydrologic Unit Code. A numeric United States Geologic Survey code that corresponds to a watershed area. Each area also has a text description associated with the numeric code.

Hydrology. The science of the behavior of water in the atmosphere, on the surface of the earth, and underground. A typical hydrologic study is undertaken to compute flow rates associated with specified flood events.

Hydrometeorologic. Water-related meteorological data such as rainfall or runoff.

Hydrostatic Loads. Those loads or pressures resulting from the static mass of water at any point of floodwater contact with a structure. They are equal in all direction and always act perpendicular to the surface on which they are applied. Hydrostatic loads can act vertically on structural members such as floors, decks and roofs, and can act laterally on upright structural members such as walls, piers, and foundations.

IDNR. Indiana Department of Natural Resources.

Illicit Discharge. Any discharge to a conveyance that is not composed entirely of stormwater except naturally occurring floatables, such as leaves or tree limbs.

Impact Areas. Areas defined or mapped that are unlikely to be easily drained because of one or more factors including but not limited to any of the following: soil type, topography, land where there is not adequate outlet, a floodway or floodplain, land within 75 feet of each bank of any regulated drain or within 75 feet from the centerline of any regulated tile ditch.

Impaired Waters. Waters that do not or are not expected to meet applicable water quality standards, as included on IDEM's CWA Section 303(d) List of Impaired Waters.

Impervious surface. Surfaces, such as pavement and rooftops, which prevent the infiltration of stormwater into the soil.

Individual building lot. A single parcel of land within a multi-parcel development.

Individual lot operator. A contractor or subcontractor working on an individual lot.

Individual lot owner. A person who has financial control of construction activities for an individual lot.

INDOT. Indiana Department of Transportation. Generally used here to refer to specifications contained in the publication "INDOT Standard Specifications."

Infiltration practices. Any structural BMP designed to facilitate the percolation of run-off through the soil to ground water. Examples include infiltration basins or trenches, dry wells, and porous pavement.

Infiltration. Passage or movement of water into the soil.

Infiltration Swales. A depressed earthen area that is designed to promote infiltration.

Inlet. An opening into a storm drain system for the entrance of surface storm water runoff, more completely described as a storm drain inlet.

Intermittent Stream.

Invert. The inside bottom of a culvert or other conduit.

Junction Chamber. A converging section of conduit, usually large enough for a person to enter, used to facilitate the flow from one or more conduits into a main conduit.

Land Surveyor. A person licensed under the laws of the State of Indiana to practice land surveying.

Land-disturbing Activity. Any man-made change of the land surface, including removing vegetative cover that exposes the underlying soil, excavating, filling, transporting and grading.

Larger common plan of development or sale. A plan, undertaken by a single project site owner or a group of project site owners acting in concert, to offer lots for sale or lease; where such land is contiguous, or is known, designated, purchased or advertised as a common unit or by a common name, such land shall be presumed as being offered for sale or lease as part of a larger common plan. The term also includes phased or other construction activity by a single entity for its own use.

Lateral Storm Sewer. A drain that has inlets connected to it but has no other storm drain connected.

Life Cycle Cost. Cost based on the total cost incurred over the system life including research, development, testing, production, construction, operation, and maintenance. Costs are normally determined on present worth or equivalent annual cost basis.

Low Entry Elevation. The elevation in a structure where overbank flooding can enter the structure.

Lowest Adjacent Grade. The elevation of the lowest grade adjacent (abutting) to a structure, where the soil meets the foundation around the outside of the structure (including structural members such as basement walkout, patios, decks, porches, support posts or piers, and rim of the window well.

Lowest Floor. Refers to the lowest of the following:

1. The top of the basement floor;

2. The top of the garage floor, if the garage is the lowest level of the building;

3. The top of the first floor of buildings constructed on a slab or of buildings elevated on pilings or constructed on a crawl space with permanent openings; or

4. The top of the floor level of any enclosure below an elevated building where the walls of the enclosure provide any resistance to the flow of flood waters unless:

   a] The walls are designed to automatically equalize the hydrostatic flood forces on the walls by allowing for the entry and exit of flood waters, by providing a minimum of two opening (in addition to doorways and windows) having a total area of one (1) square foot for every two (2) square feet of enclosed area subject to flooding. The bottom of all such openings shall be no higher than one (1) foot above grade.

   b] Such enclosed space shall be usable only for the parking of vehicles or building access.

Major Drainage System. Drainage system carrying runoff from an area of one or more square miles.

Manhole. Storm drain structure through which a person may enter to gain access to an underground storm drain or enclosed structure.

Manning Roughness Coefficient or Manning's "n" Value. A dimensionless coefficient ("n") used in the Manning's equation to account for channel wall frictional losses in steady uniform flow.

Measurable storm event. A precipitation event that results in a total measured precipitation accumulation equal to, or greater than, one-half (0.5) inch of rainfall.

Minimum Control Measure. Minimum measures required by the NPDES Phase II program. The six (6) MCMs are: Public education and outreach, Public participation and involvement, Illicit discharge detection and elimination, Construction site runoff control, Post-construction runoff control, and Pollution prevention and good housekeeping.

Minor Drainage Systems. Drainage system carrying runoff from an area of less than one square mile.

Minor Subdivision. See Subdivision, Minor.

Mulch. A natural or artificial layer of plant residue or other materials covering the land surface which conserves moisture, holds soil in place, aids in establishing plant cover, and minimizes temperature fluctuations.

Multi-Family. Any structure which contains three or more dwelling units. A dwelling unit is any structure, or part of a structure, which is constructed to a house a family.

Municipal Separate Storm Sewers. An MS4 meets all the following criteria: (1) is a conveyance or system of conveyances owned by the state, county, city, town, or other public entity; (2) discharges to waters of the U.S.; (3) is designed or used for collecting or conveying stormwater; (4) is not a combined sewer; and, (5) is not part of a Publicly Owned Treatment Works (POTW).

Municipal, state, federal, or institutional refueling area. An operating gasoline or diesel fueling area whose primary function is to provide fuel to either municipal, state, federal, or institutional equipment or vehicles.

Mutual Drain. A drain that: (1) Is located on two or more tracts of land that are under different ownership; (2) was established by the mutual consent of all the owners; and (3) was not established under or made subject to any drainage statute.

National Flood Insurance Program (NFIP). The NFIP is a Federal program enabling property owners to purchase flood insurance. The Federal Emergency Management Agency administers the NFIP in communities throughout the Unites States. The NFIP is based on an agreement between local communities and the Federal government which states that if a community will implement floodplain management measures to reduce future flood risks to new construction and substantially improved structures in flood hazard areas, the Federal government will make flood insurance available within the community as a financial protection against flood losses that do occur.

National Geodetic Vertical Datum of 1929. The nationwide, Federal Elevation datum used to reference topographic elevations to a known value.

National Pollution Discharge Elimination System (NPDES). A permit developed by the U.S. EPA through the Clean Water Act. In Indiana, the permitting process has been delegated to IDEM. This permit covers aspects of municipal stormwater quality.

Natural Drainage. The flow patterns of stormwater run-off over the land in its pre-development state.

Nonagricultural land use. Commercial use of land for the manufacturing and wholesale or retail sale of goods or services, residential or institutional use of land intended primarily to shelter people, highway use of land including lanes, alleys, and streets, and other land uses not included in agricultural land use.

Nonpoint Source Pollution. Pollution that enters a water body from diffuse origins on the watershed and does not result from discernable, confined, or discrete conveyances.

Normal Depth. Depth of flow in an open conduit during uniform flow for the given conditions.

North American Vertical Datum of 1988 (NAVD 1988). The nationwide, Federal Elevation datum used to reference topographic elevations to a known value.

Nutrient(s). (1) A substance necessary for the growth and reproduction of organisms. (2) In water, those substances (chiefly nitrates and phosphates) that promote growth of algae and bacteria.

Off-site. Everything not located at or within a particular site.

Off-site Land Areas. Those areas that by virtue of existing topography naturally shed surface water onto or through the developing property.

100-Year Frequency Flood. See “regulatory flood”.

On-Site. Located within the controlled or urbanized area where runoff originates.

Open Drain. A natural watercourse or constructed open channel that conveys drainage water.

Open Space. Any land area devoid of any disturbed or impervious surfaces created by industrial, commercial, residential, agricultural, or other manmade activities.

Orifice. A device which controls the rate of flow from a detention basin.

Outfall scouring. The deterioration of a streambed or lakebed from an outfall discharge to an extent that the excessive settling of solid material results and suitable aquatic habitat is diminished.

Outfall. The point, location, or structure where a pipe or open drain discharges to a receiving body of water.

Outlet. The point of water disposal from a stream, river, lake, tidewater, or artificial drain.

Overland Flow. Consists of sheet flow, shallow concentrated flow and channel flow.

Peak Discharge (or Peak Flow). The maximum instantaneous flow from a given storm condition at a specific location.

Percolation. The movement of water through soil.

Perennial Stream. A stream that maintains water in its channel throughout the year.

Permanent stabilization. The establishment, at a uniform density of seventy percent (70%) across the disturbed area, of vegetative cover or permanent non-erosive material that will ensure the resistance of the soil to erosion, sliding, or other movement.

Permeability (soil). The quality of a soil that enables water or air to move through it. Usually expressed in inches per hour or inches per day.

Pervious. Allowing movement of water.

Pesticides. Chemical compounds used for the control of undesirable plants, animals, or insects. The term includes insecticides, herbicides, algicides, rodenticides, nematicides, fungicides, and growth regulators.

pH. A numerical measure of hydrogen ion activity, the neutral point being 7.0. All pH values below 7.0 are acid, and all above 7.0 are alkaline.

Phasing of construction. Sequential development of smaller portions of a large project site, stabilizing each portion before beginning land disturbance on subsequent portions, to minimize exposure of disturbed land to erosion.

Phosphorus (available). Inorganic phosphorus that is readily available for plant growth.

Piping. The formation of "pipes" by underground erosion. Water in the soil carries the fine soil particles away, and a series of eroded tubes or tunnels develop. These openings will grow progressively larger and can cause a dam failure.

Planimetric Data. Horizontal measurements involving distances or dimensions on a diagram, map, Plat of Survey or topographic map. Normally in units of feet.

Plat of Survey. A scaled diagram showing boundaries of a tract of land or subdivision. This may constitute a legal description of the land and be used in lieu of a written description.

Point Source. Any discernible, confined, and discrete conveyance including but not limited to any pipe, ditch, channel, tunnel, conduit, well, discrete fissure, or container from which pollutants are or maybe discharged (P.L. 92-500, Section 502[14]).

Pollutant of concern. Any pollutant that has been documented via analytical data as a cause of impairment in any waterbody.

Porosity. The volume of pore space in soil or rock.

Porous pavement. A type of infiltration practice to improve the quality and reduce the quantity of storm water run-off via the use of manmade, pervious pavement which allows run-off to percolate through the pavement and into underlying soils

Private Drain. A drain that: (1) Is located on land owned by one person or by two or more persons jointly; and (2) was not established under or made subject to any drainage statute.

Professional Engineer. A person licensed under the laws of the State of Indiana to practice professional engineering.

Programmatic Indicator. Any data collected by an MS4 entity that is used to indicate implementation of one (1) or more minimum control measures.

Project site owner. The person required to submit a stormwater permit application, and required to comply with the terms of this ordinance, including a developer or a person who has financial and operational control of construction activities, and project plans and specifications, including the ability to make modifications to those plans and specifications.

Project site. The entire area on which construction activity is to be performed.

Probable Maximum Flood. The most severe flood that may be expected from a combination of the most critical meteorological and hydrological conditions that are reasonably possible in the drainage basin. It is used in designing high-risk flood protection works and siting of structures and facilities that shall be subject to almost no risk of flooding. The probable maximum flood is usually much larger that the 100-year flood.

Publicly Owned Treatment Works (POTW). A municipal operation that breaks down and removes contaminants in the wastewater prior to discharging to a stream through primary and/or secondary treatment systems.

Qualified professional. An individual who is trained and experienced in storm water treatment techniques and related fields as may be demonstrated by state registration, professional certification, experience, or completion of coursework that enable the individual to make sound, professional judgments regarding storm water control or treatment and monitoring, pollutant fate and transport, and drainage planning.

Radius of Curvature. Length of radius of a circle used to define a curve.

Rain garden. A vegetative practice used to alter impervious surfaces, such as roofs, into pervious surfaces for absorption and treatment of rainfall.

Rainfall Intensity. The rate at which rain is falling at any given instant, usually expressed in inches per hour.

Reach. Any length of river, channel or storm drain.

Receiving Stream or Receiving Water. The body of water into which runoff or effluent is discharged. The term does not include private drains, unnamed conveyances, retention and detention basins, or constructed wetlands used as treatment.

Recharge. Replenishment of groundwater reservoirs by infiltration and transmission from the outcrop of an aquifer or from permeable soils.

Recurrence Interval. A statistical expression of the average time between floods equaling or exceeding a given magnitude.

Redevelopment. Alterations of a property that change a site or building in such a way that there is disturbances of one (1) acre or more of land. The term does not include such activities as exterior remodeling.

Regulated Drain. A drain subject to the provisions of the Indiana Drainage Code, I.C.-36-9-27.

Regulatory or 100-Year Flood. The discharge or elevation associated with the 100-year flood as calculated by a method and procedure which is acceptable to and approved by the Indiana Department of Natural Resources and the Federal Emergency Management Agency. The "regulatory flood" is also known as the "base flood".

Regulatory Floodway. See Floodway.

Release Rate - The amount of storm water release from a storm water control facility per unit of time.

Reservoir. A natural or artificially created pond, lake or other space used for storage, regulation or control of water. May be either permanent or temporary. The term is also used in the hydrologic modeling of storage facilities.

Retail gasoline outlet. An operating gasoline or diesel fueling facility whose primary function is the resale of fuels. The term applies to facilities that create five thousand (5,000) or more square feet of impervious surfaces, or generate an average daily traffic count of one hundred (100) vehicles per one thousand (1,000) square feet of land area.

Retention basin. A type of storage practice, that has no positive outlet, used to retain storm water run-off for an indefinite amount of time. Runoff from this type of basin is removed only by infiltration through a porous bottom or by evaporation.

Retention. The storage of stormwater to prevent it from leaving the development site. May be temporary or permanent.

Retention Facility. A facility designed to completely retain a specified amount of stormwater runoff without release except by means of evaporation, infiltration or pumping. The volumes are often referred to in units of acre-feet.

Return Period - The average interval of time within which a given rainfall event will be equaled or exceeded once. A flood having a return period of 100 years has a one percent probability of being equaled or exceeded in any one year.

Revetment. Facing of stone or other material, either permanent or temporary, placed along the edge of a stream to stabilize the bank and protect it from the erosive action of the stream. Also see Revetment riprap.

Right-of-Way for a County Drain. The statutory right of way as defined by Indiana Code for a regulated drain.

Riparian habitat. A land area adjacent to a waterbody that supports animal and plant life associated with that waterbody.

Riparian zone. Of, on, or pertaining to the banks of a stream, river, or pond.

Riprap. Broken rock, cobble, or boulders placed on earth surfaces, such as the face of a dam or the bank of a stream, for protection against the action of water (waves). Revetment riprap is material graded such that: (1) no individual piece weighs more than 120 lbs. and (2) 90-100% will pass through a 12-inch sieve, 20-60% through a 6-inch sieve, and not more than 10% through a 12-inch sieve.

River Restoration. Restoring the channel of a stream or ditch to its perceived original, non-obstructed capacity by means of clearing & snagging, obstruction removal, and inexpensive streambank protection measures. The term "restoration", as noted, does not necessarily imply restoration or improvement of water quality or habitat within the channel or its adjacent area.

Riverine. Relating to, formed by, or resembling a stream (including creeks and rivers).

Runoff Coefficient - A decimal fraction relating the amount of rain which appears as runoff and reaches the storm drain system to the total amount of rain falling. A coefficient of 0.5 implies that 50 percent of the rain falling on a given surface appears as storm water runoff.

Runoff. That portion of precipitation that flows from a drainage area on the land surface, in open channels, or in stormwater conveyance systems.

Sand. (1) Soil particles between 0.05 and 2.0 mm in diameter. (2) A soil textural class inclusive of all soils that are at least 70% sand and 15% or less clay.

Sanitary Backup. The condition where a sanitary sewer reaches capacity and surcharges into the lowest area.

Scour. The clearing and digging action of flowing water.

Sediment. Solid material (both mineral and organic) that is in suspension, is being transported, or has been moved from its site of origin by air, water, gravity, or ice and has come to rest on the earth's surface.

Sediment Forebay. See "Forebay".

Sedimentation. The process that deposits soils, debris and other unconsolidated materials either on the ground surfaces or in bodies of water or watercourses.

Seepage. The passage of water or other fluid through a porous medium, such as the passage of water through an earth embankment or masonry wall.

Sensitive Water. A water body in need of priority protection or remediation base on its:

providing habitat for threatened or endangered species,

usage as a public water supply intake,

relevant community value,

usage for full body contact recreation,

exceptional use classification as found in 327 IAC 2-1-11(b), outstanding state resource water classification as found in 327 IAC 2-1-2(3) and 327 IAC 2-1.5-19(b).

Settling Basin. An enlargement in the channel of a stream to permit the settling of debris carried in suspension.

Silt Fence. A fence constructed of wood or steel supports and either natural (e.g. burlap) or synthetic fabric stretched across area of non-concentrated flow during site development to trap and retain on-site sediment due to rainfall runoff.

Silt. (1) Soil fraction consisting of particles between 0.002 and 0.05 mm in diameter. (2) A soil textural class indicating more than 80% silt.

Siphon - A closed conduit or portion of which lies above the hydraulic grade line, resulting in a pressure less than atmospheric and requiring a vacuum within the conduit to start flow. A siphon utilizes atmospheric pressure to effect or increase the flow of water through a conduit. An inverted siphon is used to carry storm water flow under an obstruction such as a sanitary sewer.

Site. The entire area included in the legal description of the land on which land disturbing activity is to be performed.

Slope. Degree of deviation of a surface from the horizontal, measured as a numerical ratio or percent. Expressed as a ratio, the first number is commonly the horizontal distance (run) and the second is the vertical distance (rise)--e.g., 2:1. However, the preferred method for designation of slopes is to clearly identify the horizontal (H) and vertical (V) components (length (L) and Width (W) components for horizontal angles). Also note that according to international standards (Metric), the slopes are presented as the vertical or width component shown on the numerator--e.g., 1V:2H. Slope expressions in this Ordinance follow the common presentation of slopes--e.g., 2:1 with the metric presentation shown in parenthesis--e.g., (1V:2H). Slopes can also be expressed in "percents". Slopes given in percents are always expressed as (100*V/H) --e.g., a 2:1 (1V:2H) slope is a 50% slope.

Soil and Water Conservation District. A public organization created under state law as a special-purpose district to develop and carry out a program of soil, water, and related resource conservation, use, and development within its boundaries. A subdivision of state government with a local governing body, established under IC 14-32.

Soil. The unconsolidated mineral and organic material on the immediate surface of the earth that serves as a natural medium for the growth of land plants.

Solid Waste. Any garbage, refuse, debris, or other discarded material.

Special Flood Hazard Area. An area that is inundated during the 100-Year flood.

Spill. The unexpected, unintended, abnormal, or unapproved dumping, leakage, drainage, seepage, discharge, or other loss of petroleum, hazardous substances, extremely hazardous substances, or objectionable substances. The term does not include releases to impervious surfaces when the substance does not migrate off the surface or penetrate the surface and enter the soil.

Spillway - A waterway in or about a hydraulic structure, for the escape of excess water.

Standard Project Flood. A term used by the U.S. Army Corps of Engineers to designate a flood that may be expected from the most severe combination of meteorological and hydrological conditions that are considered reasonable characteristics of the geographical area in which the drainage basin is located, excluding extremely rare combinations. The peak flow for a standard project flood is generally 40 – 60 percent of the probable maximum flood for the same location.

Stilling Basin - A basin used to slow water down or dissipate its energy.

Storage practices. Any structural BMP intended to store or detain stormwater and slowly release it to receiving waters or drainage systems. The term includes detention and retention basins.

Storm drain signing. Any marking procedure that identifies a storm sewer inlet as draining directly to a receiving waterbody so as to avoid dumping pollutants. The procedures can include painted or cast messages and adhesive decals.

Storm Duration. The length of time that water may be stored in any stormwater control facility, computed from the time water first begins to be stored.

Storm Event. An estimate of the expected amount of precipitation within a given period of time. For example, a 10-yr. frequency, 24-hr. duration storm event is a storm that has a 10% probability of occurring in any one year. Precipitation is measured over a 24-hr. period.

Storm Frequency. The time interval between major storms of predetermined intensity and volumes of runoff--e.g., a 5-yr., 10-yr. or 20-yr. storm.

Storm Sewer. A closed conduit for conveying collected storm water, while excluding sewage and industrial wastes. Also called a storm drain.

Stormwater Drainage System - All means, natural or man-made, used for conducting storm water to, through or from a drainage area to any of the following: conduits and appurtenant features, canals, channels, ditches, storage facilities, swales, streams, culverts, streets and pumping stations.

Stormwater Facility. All ditches, channels, conduits, levees, ponds, natural and manmade impoundments, wetlands, tiles, swales, sewers and other natural or artificial means of draining surface and subsurface water from land.

Stormwater Pollution Prevention Plan. A plan developed to minimize the impact of storm water pollutants resulting from construction activities.

Stormwater Quality Management Plan. A comprehensive written document that addresses stormwater runoff quality.

Stormwater Quality Measure. A practice, or a combination of practices, to control or minimize pollutants associated with storm water runoff.

Stormwater runoff. The water derived from rains falling within a tributary basin, flowing over the surface of the ground or collected in channels or conduits.

Stormwater. Water resulting from rain, melting or melted snow, hail, or sleet.

Stream Gauging. The quantitative determination of streamflow using gauges, current meters, weirs, or other measuring instruments at selected locations (see Gauging station').

Stream Length. The length of a stream or ditch, expressed in miles, from the confluence of the stream or ditch with the receiving stream to the upstream extremity of the stream or ditch, as indicated by the solid or dashed, blue or purple line depicting the stream or ditch on the most current edition of the seven and one-half (72) minute topographic quadrangle map published by the United States Geological Survey, measured along the meanders of the stream or ditch as depicted on the map.

Stream. See Intermittent stream, Perennial stream, Receiving stream.

Streambanks. The usual boundaries (not the flood boundaries) of a stream channel. Right and left banks are named facing downstream.

Strip development. A multi-lot project where building lots front on an existing road.

Structure. Refers to a structure that is principally above ground and is enclosed by walls and a roof. The term includes but is not limited to, a gas or liquid storage tank, a manufactured home or a prefabricated building, and recreational vehicles to be installed on a site for more than 180 days.

Structural Engineer. A person licensed under the laws of the State of Indiana to engage in the designing or supervising of construction, enlargement or alteration of structures or any part thereof.

Structural Floodplain. Management Measures. Those physical or engineering measures employed to modify the way foods behave, (e.g., dams, dikes, levees, channel enlargements and diversions).

Subarea/Subbasin. Portion of a watershed divided into homogenous drainage units which can be modeled for purposes of determining runoff rates. The subareas/subbasins have distinct boundaries, as defined by the topography of the area.

Subdivision. Any land that is divided or proposed to be divided into lots, whether contiguous or subject to zoning requirements, for the purpose of sale or lease as part of a larger common plan of development or sale.

Subdivision, Minor. The subdivision of a parent parcel into any combination of not more than three (3) contiguous or non-contiguous new residential, commercial, or industrial building sites. The parcel shall front upon an existing street which is an improved right-of-way maintained by eh County or other governmental entity and not involve any new street.

Subsoil. The B horizons of soils with distinct profiles. In soils with weak profile development, the subsoil can be defined as the soil below which roots do not normally grow.

Subsurface Drain. A pervious backfield trench, usually containing stone and perforated pipe, for intercepting groundwater or seepage.

Subwatershed. A watershed subdivision of unspecified size that forms a convenient natural unit. See also Subarea.

Sump Failure. A failure of the sump pump that results in inundation of crawl space or basement.

Sump Pump. A pump that discharges seepage from foundation footing drains.

Surcharge. Backup of water in a sanitary or storm sewer system in excess of the design capacity of the system.

Surface Runoff. Precipitation that flows onto the surfaces of roofs, streets, the ground, etc., and is not absorbed or retained by that surface but collects and runs off.

Suspended Solids. Solids either floating or suspended in water.

Swale. An elongated depression in the land surface that is at least seasonally wet, is usually heavily vegetated, and is normally without flowing water. Swales conduct stormwater into primary drainage channels and may provide some groundwater recharge.

Tailwater. The water surface elevation at the downstream side of a hydraulic structure (i.e. culvert, bridge, weir, dam, etc.).

Temporary Stabilization. The covering of soil to ensure its resistance to erosion, sliding, or other movement. The term includes vegetative cover, anchored mulch, or other non-erosive material applied at a uniform density of seventy percent (70%) across the disturbed area.

Thalweg. The deepest point (or centerline) of a channel.

Tile Drain. Pipe made of perforated plastic, burned clay, concrete, or similar material, laid to a designed grade and depth, to collect and carry excess water from the soil.

Tile Drainage. Land drainage by means of a series of tile lines laid at a specified depth, grade, and spacing.

Time of Concentration (tc). The travel time of a particle of water from the most hydraulically remote point in the contributing area to the point under study. This can be considered the sum of an overland flow time and times of travel in street gutters, storm sewers, drainage channels, and all other drainage ways.

Topographic Map. Graphical portrayal of the topographic features of a land area, showing both the horizontal distances between the features and their elevations above a given datum.

Topography. The representation of a portion of the earth's surface showing natural and man-made features of a give locality such as rivers, streams, ditches, lakes, roads, buildings and most importantly, variations in ground elevations for the terrain of the area.

Topsoil. (1) The dark-colored surface layer, or a horizon, of a soil; when present it ranges in depth from a fraction of an inch to 2-3 ft. (2) Equivalent to the plow layer of cultivated soils. (3) Commonly used to refer to the surface layer(s), enriched in organic matter and having textural and structural characteristics favorable for plant growth.

Total Maximum Daily Load. Method used to establish allowable loadings for specified pollutants in a surface water resource to meet established water quality standards.

Toxicity. The characteristic of being poisonous or harmful to plant or animal life. The relative degree or severity of this characteristic.

TP-40 Rainfall. Design storm rainfall depth data for various durations published by the National Weather Service in their Technical Paper 40 dated 1961.

Trained individual. An individual who is trained and experienced in the principles of storm water quality, including erosion and sediment control as may be demonstrated by state registration, professional certification, experience, or completion of coursework that enable the individual to make judgments regarding storm water control or treatment and monitoring.

Transition Section. Reaches of the stream of floodway where water flows from a narrow cross-section to a wide cross-section or vice-versa.

Tributary. Based on the size of the contributing drainage area, a smaller watercourse which flows into a larger watercourse.

Turbidity. (1) Cloudiness of a liquid, caused by suspended solids. (2) A measure of the suspended solids in a liquid.

Underdrain. A small diameter perforated pipe that allows the bottom of a detention basin, channel or swale to drain.

Unified Soil Classification System. A system of classifying soils that is based on their identification according to particle size, gradation, plasticity index, and liquid limit.

Uniform Flow. A state of steady flow when the mean velocity and cross-sectional area remain constant in all sections of a reach.

Unit Hydrograph. A unit hydrograph is the hydrograph that results from one inch of precipitation excess generated uniformly over the watershed at a uniform rate during a specified period of time.

Urban Drain. A drain defined as "Urban Drain" in Indiana Drainage Code.

Urbanization The development, change or improvement of any parcel of land consisting of one or more lots for residential, commercial, industrial, institutional, recreational or public utility purposes.

Vegetative practices. Any nonstructural or structural BMP that, with optimal design and good soil conditions, utilizes various forms of vegetation to enhance pollutant removal, maintain and improve natural site hydrology, promote healthier habitats, and increase aesthetic appeal. Examples include grass swales, filter strips, buffer strips, constructed wetlands, and rain gardens.

Vegetative Stabilization. Protection of erodible or sediment producing areas with: permanent seeding (producing long-term vegetative cover), short-term seeding (producing temporary vegetative cover), or sodding (producing areas covered with a turf of perennial sod-forming grass).

Water Course. Any river, stream, creek, brook, branch, natural or man-made drainage way in or into which stormwater runoff or floodwaters flow either regularly or intermittently.

Water Quality. A term used to describe the chemical, physical, and biological characteristics of water, usually in respect to its suitability for a particular purpose.

Water Resources. The supply of groundwater and surface water in a given area.

Water Table. (1) The free surface of the groundwater. (2) That surface subject to atmospheric pressure under the ground, generally rising and failing with the season or from other conditions such as water withdrawal.

Waterbody. Any accumulation of water, surface, or underground, natural or artificial.

Watercourse. Any river, stream, creek, brook, branch, natural or man-made drainageway in or into which stormwater runoff or floodwaters flow either continuously or intermittently.

Watershed Area. All land and water within the confines of a drainage divide. See also Watershed.

Watershed. The region drained by or contributing water to a specific point that could be along a stream, lake or other stormwater facilities. Watersheds are often broken down into subareas for the purpose of hydrologic modeling.

Waterway. A naturally existing or manmade open conduit or channel utilized for the conveyance of water.

Weir. A channel-spanning structure for measuring or regulating the flow of water.

Wellhead protection area. Has the meaning set forth at 327 IAC 8-4.1-1(27).

Wet-Bottom Detention Basin (Retention Basin) - A basin designed to retain a permanent pool of water after having provided its planned detention of runoff during a storm event.

Wetlands. Areas that are inundated or saturated by surface water or groundwater at a frequency and duration sufficient to support, and that under normal circumstances do support, a prevalence of vegetation typically adapted for life in saturated soil conditions.

APPENDIX B

FORMS

Notice of Intent -- State Form #47487
Construction Inspection Log
Certification of Completion
Notice of Termination
Closeout Inspection
Individual Lot Typical Erosion &Sediment Control
Post-Construction BMP Inspection Checklists

RULE 5 - NOTICE OF INTENT (NOI)

State Form 47487 (R5 / 10-05)
Indiana Department of Environmental Management
Office of Water Quality
Approved by State Board of Accounts, 2005

Type of Submittal (Check Appropriate Box):
☐ Initial ☐ Amendment ☐ Renewal

Permit Number:

(Note: The initial submittal does not require a permit number; the Department will assign a number. A permit number is required when filing an amendment, applying for renewal, or correspondence related to this permit).

Note: Submission of this Notice of Intent letter constitutes notice that the project site owner is applying for coverage under the National Pollutant Discharge Elimination System (NPDES) General Permit Rule for Storm Water Discharges Associated with Construction Activity. Permitted project site owners are required to comply with all terms and conditions of the General Permit Rule 327 IAC 15-5 (Rule 5).

Project Name and Location

Project Name:

County:

Brief Description of Project Location:

Project Location: *Describe location in Latitude and Longitude (Degrees, Minutes, and Seconds or Decimal representation) and by legal description (Section, Township, and Range, Civil Township)*

Latitude:

Longitude:

Quarter: Section: Township: Range: Civil Township:

Does ☐ all or ☐ part of this project lie within the jurisdictional boundaries of a Municipal Separate Storm Sewer System (MS4) as defined in 327 IAC 15-13?
☐ Yes ☐ No If yes, name the MS4(s):

Project Site Owner and Project Contact Information

Company Name *(If Applicable):*

Project Site Owner's Name: *(An Individual)*

Title/Position:

Address:

City:

State:

ZIP Code:

Phone:

FAX:

E-Mail Address: *(If Available)*

Ownership Status *(check one):*
Governmental Agency: ☐ Federal ☐ State ☐ Local Non-Governmental: ☐ Public ☐ Private ☐ Other: *(Explain)*

Contact Person:

Company Name: *(If Applicable)*

Affiliation to Project Site Owner:

Address: *(if different from above)*

City:

State:

ZIP Code:

Phone:

FAX:

E-Mail Address: *(If Available)*

Project Information

Project Description:
☐ Residential-Single Family ☐ Residential-Multi-Family ☐ Commercial ☐ Industrial ☐ Other: *(Explain)*

Name of Receiving Water:

(Note: If applicable, name of municipal operator of storm sewer and the ultimate receiving water. If a retention pond is present on the property, the name of the nearest possible receiving water receiving discharge must be provided).

Project Acreage

Total Acreage: Proposed Land Disturbance: *(in acres)*

Total Impervious Surface Area: *(in square feet, estimated for completed project)*

Project Duration

Estimated Start Date: Estimated End Date for all Land Disturbing Activity:

(Continued on Reverse Side)

Construction Plan Certification

By signing this Notice of Intent letter, I certify the following:

A. The storm water quality measures included in the Construction Plan comply with the requirements of 327 IAC 15-5-6.5, 327 IAC 15-5-7, and 327 IAC 15 5-7.5
B. the storm water pollution prevention plan complies with all applicable federal, state, and local storm water requirements;
C. the measures required under 327 IAC 15-5-7 and 327 IAC 15-5-7.5 will be implemented in accordance with the storm water pollution prevention plan;
D. if the projected land disturbance is One (1) acre or more, the applicable Soil and Water Conservation District or other entity designated by the Department, has been sent a copy of the Construction Plan for review;
E. storm water quality measures beyond those specified in the storm water pollution prevention plan will be implemented during the life of the permit if necessary to comply with 327 IAC 15-5-7; and
F. implementation of storm water quality measures will be inspected by trained individuals.

In addition to this form, I have enclosed the following required information:

☐ Verification by the reviewing agency of acceptance of the Construction Plan.

☐ Proof of publication in a newspaper of general circulation in the affected area that notified the public that a construction activity is to commence, including all required elements contained in 327 IAC 15-5-5 (9). The Proof of Publication **Must** include company name and address, project name, address/location of the project, and the receiving stream to which storm water will be discharged. Following is a sample Proof of Publication:

"XERT Development Inc. (10 Willow Lane, Indianapolis, Indiana 46206) is submitting a Notice of Intent to the Indiana Department of Environmental Management of our intent to comply with the requirements of 327 IAC 15-5 to discharge storm water from construction activities associated with Water Garden Estates located at 24 Washout Lane, Indianapolis, Indiana 46206. Runoff from the project site will discharge to the White River. Questions or comments regarding this project should be directed to Walter Water of XERT Development Inc."

☐ $100 check or money order payable to the Indiana Department of Environmental Management. A permit fee is required for all NOI submittals (initial and renewal). A fee is not required for amendments.

Project Site Owner Responsibility Statement

By signing this Notice of Intent letter, I certify under penalty of law that this document and all attachments were prepared under my direction or supervision in accordance with a system designed to assure that qualified personnel properly gather and evaluate the information submitted. Based on my inquiry of the person or persons who manage the system, or those persons directly responsible for gathering the information, the information submitted is, to the best of my knowledge and belief, true, accurate, and complete. I am aware that there are significant penalties for submitting false information or violating the provisions of 327 IAC 15-5, including the possibility of fine and imprisonment for knowing violations.

Printed Name of Project Owner: _____

Signature of Project Owner: _____ Date: _____

This Notice of Intent must be signed by an individual meeting the signatory requirements in 327 IAC 15-4-3(g).
All NOI submittals must include an original signature (FAX and photo copies are not acceptable).

Note: Within 48 hours of the initiation of construction activity, the project site owner must notify the appropriate plan review agency and IDEM, Office of Water Quality of the actual project start date if it varies from the date provided above.

Note: A permit issued under 327 IAC 15-5 is granted by the commissioner for a period of five (5) years from the date coverage commences. Once the five (5) year permit term duration is reached, a general permit issued under this rule will be considered expired, and as necessary for construction activity continuation, a new Notice of Intent letter (Renewal) is required to be submitted ninety (90) days prior to the termination of coverage. The submittal must include the NOI Letter, Proof of Publication, Fee, and verification that the plan for the project was approved (original verification of plan approval is acceptable provided the scope of the project has not changed from the original submittal).

Mail this form to: **Indiana Department of Environmental Management**
Cashiers Office - Mail Code 50-10C
100 North Senate Avenue
Indianapolis., IN 46204-2251

327 IAC 15-5-6 (a) also requires a copy of the completed Notice of Intent letter be submitted to the local Soil and Water Conservation District or other entity designated by the Department, where the land disturbing activity is to occur.

Questions regarding the development or implementation of the Construction Plan/Storm Water Pollution Prevention Plan should be directed to the local county Soil and Water Conservation District (SWCD). If you are unable to reach the SWCD or have other questions please direct those inquiries to the IDEM Rule 5 Coordinator at 317/233-1864 or 800/451-6027 ext.3-1864.
For information and forms visit: http://www.in.gov/idem/water/npdes/permits/wetwthr/storm/rule5.html

Date: _____
Project: _____
Inspected by: _____

Type of Inspection: ☐ Scheduled Weekly ☐ Rain Event

CONSTRUCTION SITE INSPECTION AND MAINTENANCE LOG

All stormwater pollution prevention BMPs shall be inspected and maintained as needed to ensure continued performance of their intended function during construction and shall continue until the entire site has been stabilized and a Notice of Termination has been issued. An inspection of the project site must be completed by the end of the next business day following each measurable storm event. If there are no measurable storm events within a given week, the site should be monitored at least once in that week. Maintenance and repair shall be conducted in accordance with the accepted site plans. This log shall be kept as a permanent record and must be made available to the Town of Griffith, in an organized fashion, within forty-eight (48) hours upon request.

Yes	No	N/A	
			1. Are all sediment control barriers, inlet protection and silt fences in place and functioning properly?
			2. Are all erodible slopes protected from erosion through the implementation of acceptable soil stabilization practices?
			3. Are all dewatering structures functioning properly?
			4. Are all discharge points free of any noticeable pollutant discharges?
			5. Are all discharge points free of any noticeable erosion or sediment transport?
			6. Are designated equipment washout areas properly sited, clearly marked, and being utilized?
			7. Are construction staging and parking areas restricted to areas designated as such on the plans?
			8. Are temporary soil stockpiles in approved areas and properly protected?
			9. Are construction entrances properly installed and being used and maintained?
			10. Are “Do Not Disturb” areas designated on plan sheets clearly marked on-site and avoided?
			11. Are public roads at intersections with site access roads being kept clear of sediment, debris, and mud?
			12. Is spill response equipment on-site, logically located, and easily accessed in an emergency?
			13. Are emergency response procedures and contact information clearly posted?
			14. Is solid waste properly contained?
			15. Is a stable access provided to the solid waste storage and pick-up area?
			16. Are hazardous materials, waste or otherwise, being properly handled and stored?
			17. Have previously recommended corrective actions been implemented?

If you answered “no” to any of the above questions, describe any corrective action which must be taken to remedy the problem and when the corrective actions are to be completed.

_____
_____
_____
_____
_____
_____
_____
_____
_____
_____
_____
_____
_____
_____

Certification of Completion & Compliance

CERTIFICATE OF COMPLETION & COMPLIANCE

Address of premises on which land alteration was accomplished:_____
_____
_____

Inspection Date(s):_____ Permit Number:_____

Relative to plans prepared by:_____ on_____
(date)

I hereby certify that:

1. I am familiar with drainage requirements applicable to such land alteration (as set forth in the Stormwater Management Ordinance of the Town of Griffith); and

2. I (or a person under my direct supervision) have personally inspected the completed work and examined the drainage permit and its conditions, as-built plans, and final drainage calculations consistent with as-built conditions performed pursuant to the above referenced drainage permit; and

3. To the best of my knowledge, information, and belief, such land alteration has been performed and completed in conformity with all such drainage requirements, except _____
_____
_____

Signature: _____ Date: _____

Typed or Printed Name: _____ Phone: (___)_____

(SEAL)

Business Address: _____
_____
_____
_____

SURVEYOR ENGINEER
(circle one)

Indiana Registration No._____

RULE 5 – NOTICE OF TERMINATION (NOT)

State Form 51514 (R2 / 4-10)
INDIANA DEPARTMENT OF ENVIRONMENTAL MANAGEMENT
OFFICE OF WATER QUALITY

For questions regarding the requirements for project termination or completion of this form, contact:

Indiana Department of Environmental Management
Storm Water, Permits Coordinator
100 North Senate Avenue
MC 65-42, Room 1255
Indianapolis, Indiana 46204-2251
Telephone (317) 233-1864 or
(800) 451-6027(*within Indiana*), ext. 31864
Web Access: http://www.IN.gov/idem/4902.htm

Note: Submission of this Notice of Termination letter is a certification by the project site owner that the project meets the terms and conditions of the General Permit Rule 327 IAC 15-5 (Rule 5, Storm Water Discharges Associated with Construction Activity) for termination of permit coverage under the National Pollutant Discharge Elimination System (NPDES).

PROJECT NAME AND LOCATION

Permit number
(Note: Permit numbers were assigned to projects beginning in November of 2003. Therefore, a permit number is only applicable for those projects that began or were renewed on or after November of 2003).

Project name *(Note: Provide the project name as it appears on the active "Notice of Intent")*			**County**
Company name			
Project site owner's name (*an individual*)			
Address (*number and street)*			
City		**State**	**ZIP code**
Telephone	**FAX**	**E-mail address** (*if available*)	

THIS "NOTICE OF TERMINATION" IS BEING SUBMITTED FOR THE FOLLOWING

To be eligible for termination, specific criteria must be met. There are three options for which a project may be considered for termination. These options include:

- Option # 1 Certification for change of ownership;
- Option # 2 Certification for termination of construction activities *(327 IAC 15-8)*; and,
- Option # 3 Notice of termination to obtain early release from compliance with 327 IAC 15-5 (327 IAC 15-8).

Select one of the three options that apply to "Permit Termination" by checking the appropriate box, complete all information associated with that option, include required attachments (where applicable), and complete the "Project Site Owner Responsibility Statement" on page 2 of this form.

☐ **Option # 1 Certification for change of ownership**

This option does not apply to the sale of individual lots within the permitted acreage; only the sale of the entire project site as originally permitted. The agency may accept termination for entire sections or phases of a project that are sold. To determine if a project is eligible, please contact the IDEM Storm Water Permits Coordinator.

By signing this "Notice of Termination" , I certify the following:

A. **The project was sold**; I am no longer the project site owner as was designated in my "Notice of Intent". The new owner of the project site is:

Company name (*If applicable*)

Project site owner's name (*An individual*)

Address (*number and street)*

City **State** **ZIP code**

Telephone number **FAX** **E-mail Address** (*If available*)

B. I have notified the new project site owner of his/her responsibilities to comply with 327 IAC 15-5 and the requirements associated with the rule including filing a new "Notice of Intent."

☐ **Option # 2 Certification for termination of construction activities**

By signing this "Notice of Termination", I certify the following:

A. All land disturbing activities, including construction on all building lots, have been completed and the entire site has been stabilized;
B. All temporary erosion and sediment control measures have been removed; and
C. No future land disturbing activities will occur at the project site.

(Continued on reverse side)

☐ **Option # 3 "Notice of Termination" to obtain early release from compliance with 327 IAC 15-5**

By signing this "Notice of Termination," I certify the following:

A. The remaining, undeveloped acreage does not exceed five (5) acres, with contiguous areas not to exceed one (1) acre.
B. A map of the project site, clearly identifying all remaining undeveloped lots, is attached to this letter. The map must be accompanied by a list of names and addresses of individual lot owners or individual lot operators of all undeveloped lots.
C. All public and common improvements, including infrastructure, have been completed and permanently stabilized and have been transferred to the appropriate local entity.
D. The remaining acreage does not pose a significant threat to the integrity of the infrastructure, adjacent properties, or water quality.
E. All permanent storm water quality measures have been implemented and are operational.

Upon written notification to the department the project site owner certifies that he/she will:

A. Notify all current individual lot owners and all subsequent lot owners of the remaining undeveloped acreage and acreage with construction activity that they are responsible for complying with section 7.5 of 327 IAC 15-5. The notice must inform the individual lot owners of the requirements to:
(1) install and maintain appropriate measures to prevent sediment from leaving the individual building lot; and
(2) maintain all erosion and sediment control measures that are to remain on-site as part of the construction plan.

PROJECT SITE OWNER RESPONSIBILITY STATEMENT

By signing this "Notice of Termination" letter, I certify under penalty of law that this document and all attachments were prepared under my direction or supervision in accordance with a system designed to assure that qualified personnel properly gather and evaluate the information submitted. Based on my inquiry of the person or persons who manage the system, or those persons directly responsible for gathering the information, the information submitted is, to the best of my knowledge and belief, true, accurate, and complete. I am aware that there are significant penalties for submitting false information, including the possibility of fine and imprisonment for knowing violations.

Printed name of project site owner _____

Signature of project site owner _____ **Date** _____

This "Notice of Termination" must be signed by an individual meeting the signatory requirements in 327 IAC 15-4-3(g).

SUBMITTAL OF THE "NOTICE OF TERMINATION"

Please submit the completed "Notice of Termination" to the Indiana Department of Environmental Management (IDEM). A copy of the "Notice of Termination" is required to also be submitted to the Soil and Water Conservation District (SWCD) or a Municipal Separate Storm Sewer System (MS4). The appropriate entity will typically be the agency that reviewed the construction/storm water pollution prevention plan associated with the project. The "Notice of Termination" shall be mailed to the IDEM at

Indiana Department of Environmental Management
Storm Water Permits Coordinator
100 North Senate Avenue
Mail Code 65-42,Room 1255
Indianapolis, IN 46204-2251

Additional considerations

It is not required by 327 IAC 15-5 that the termination is verified prior to submittal, however the SWCD or MS4, as the plan review agency, may elect to field verify project completion prior to the "Notice of Termination" submittal. Several MS4s require (by local ordinance) approval of all terminations prior to submitting the "Notice of Termination" to IDEM. Failure to submit this document to an MS4 that has adopted this provision may be a violation of the local MS4 ordinance.

If the agency participates, submit the completed Notice of Termination form to the SWCD or MS4. The request for termination will be reviewed for concurrence and either returned to the project site owner for submittal to IDEM or forwarded to IDEM on behalf of the project site owner.

FOR AGENCY USE ONLY (FIELD VERIFICATION OF TERMINATION)

The SWCD, an MS4 entity, or the Indiana Department of Environmental Management may inspect the project site to evaluate the adequacy of the remaining storm water quality measures and compliance with the Notice of Termination (NOT) requirements. If the inspecting entity finds that the project site owner has meet the requirements of 327 IAC 15-5-8, the entity may elect to sign off on the project. It is the responsibility of the project site owner to file the NOT with the Indiana Department of Environmental Management.

☐ **Accepted** The site referenced above has been inspected and it has been determined that the request to terminate this project is compliant with the requirements of 327 IAC 15-5. This form must be submitted to the IDEM for final processing.

☐ **Denied** The site referenced above has been inspected and it has been determined that the request to terminate this project is not compliant with the requirements of 327 IAC 15-5. Continue to implement the Storm Water Pollution Prevention Plan and take appropriate measures to minimize the discharge of pollutants.

Signature	**Printed name**	**Agency**	**Date** (*month, day , year*)

Date: _____
Project: _____
Inspected by: _____

NOTICE OF TERMINATION INSPECTION

All construction sites shall undergo a final inspection by the following submittal of a Notice of Termination (NOT) by the project owner to ensure the site is stabilized and that post construction BMPs have been properly installed.

Yes	No	N/A	
			1. Have all earth disturbing activities been completed?
			2. Are all soils stabilized with either vegetation or mulch?
			3. Are all drainageways stabilized with either vegetation, rip rap, or other armament?
			4. Have all temporary erosion and sediment control measures been removed?
			5. Has all construction waste, trash, and debris been removed from the site?
			6. Have all permanent stormwater quality BMPs been installed in accordance with the plans, specifications, and details?
			7. Are all permanent BMPs free of sediment accumulation resulting from construction activities?

If you answered “no” to any of the above questions, describe any corrective action which must be taken to remedy the problem and when the corrective actions are to be completed.

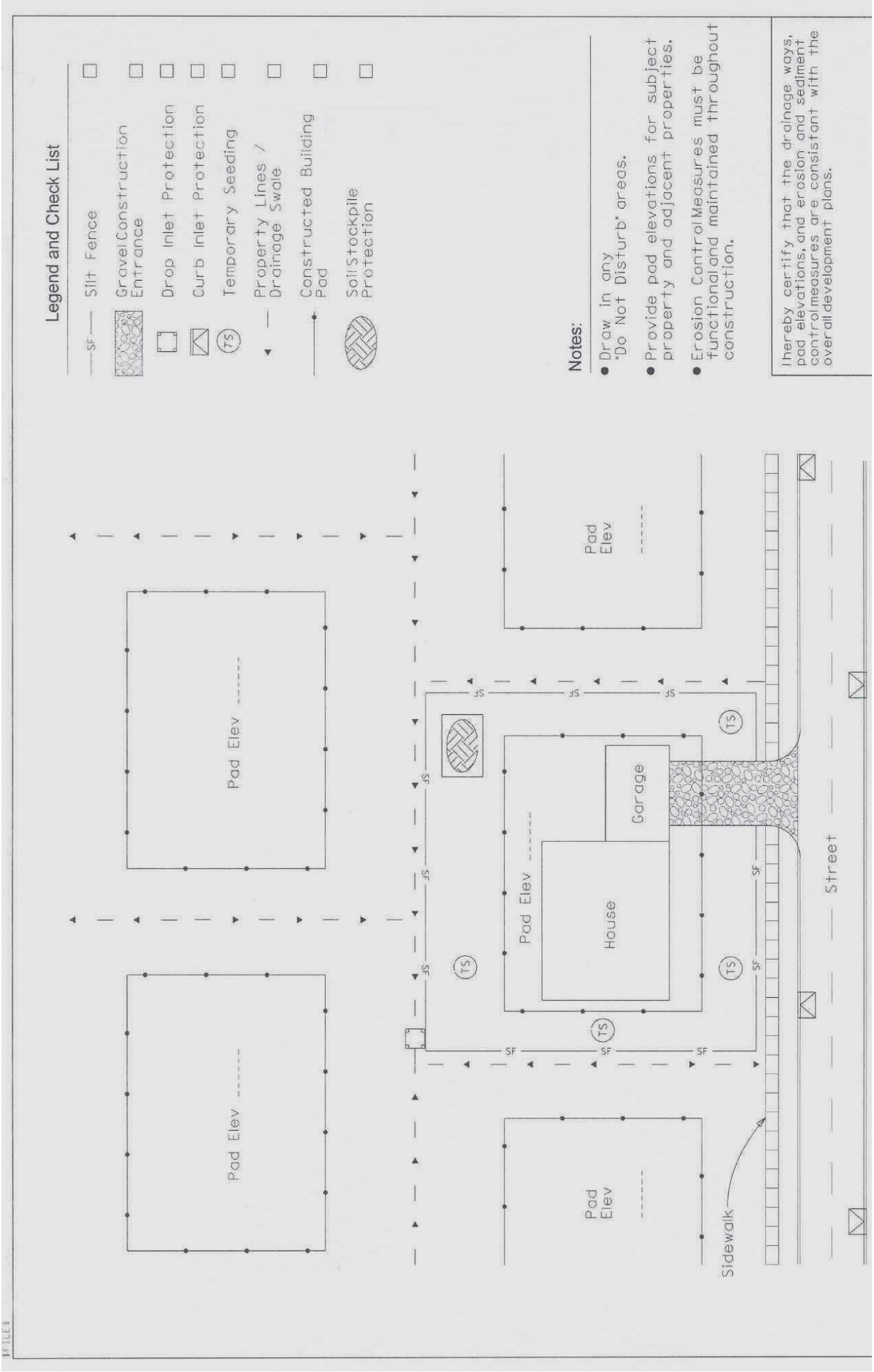
Legend and Check List
SF Silt Fence
Gravel Construction Entrance
Drop Inlet Protection
Curb Inlet Protection
TS Temporary Seeding
Property Lines / Drainage Swale
Constructed Building Pad
Soil Stockpile Protection
Notes:
Draw in any "Do Not Disturb" areas.
Provide pad elevations for subject property and adjacent properties.
Erosion Control Measures must be functional and maintained throughout construction.
I hereby certify that the drainage ways, pad elevations, and erosion and sediment control measures are consistant with the overall development plans.
Pad Elev
Garage
House
Sidewalk
Street

Bioretention Operation, Maintenance, and Management Inspection Checklist

Project: _____

Location: _____

Date: _____ **Time:** _____

Inspector: _____ **Title:** _____

Signature: _____

Maintenance Item	Satisfactory/ Unsatisfactory	Comments
1. Debris Cleanout		
Bioretention and contributing areas clean of debris (litter, branches, etc.)		
No dumping of yard wastes into BMP		
2. Vegetation		
Plant height not less than design water depth but not greater than 6 inches		
Observed plant types consistent with accepted plans		
Plants covering greater than 85% of total BMP surface area		
Plant community appears thick and healthy		
No evidence of erosion		
3. Sediment Deposits/Accumulation		
No evidence of sediment buildup around check dams or energy dissipaters.		
Sumps are not more than 50% full of sediment		
Sediment is not >20% of BMP design depth.		

4. Filter Bed		
Dewaters between storms		
Filter bed is not blocked or filled inappropriately.		
5. Outlet/Overflow Spillway		
Good Condition, no need for repair		
No evidence of erosion or downstream scour.		
Outlets are free of blockages.		

Actions to be Taken:_____

Wetland Operation, Maintenance, and Management Inspection Checklist

Project: _____

Location: _____

Date: _____ **Time:** _____

Inspector: _____ **Title:** _____

Signature: _____

Maintenance Item	Satisfactory/ Unsatisfactory	Comments
1. Embankment and Emergency Spillway		
Healthy vegetation with at least 85% ground cover.		
No signs of erosion on embankment.		
No animal burrows.		
Embankment is free of cracking, bulging, or sliding.		
Embankment is free of woody vegetation.		
Embankment is free of leaks or seeps		
Emergency spillway is clear of obstructions.		
2. Riser and Principal Spillway		
Low flow outlet free of obstruction.		
Trash rack is not blocked or damaged.		
Riser is free of excessive sediment buildup		
Outlet pipe is in good condition.		

Control valve is operational		
Outfall channels are stable and free of scouring.		
3. Wetland		
Plants covering greater than 85% of total wetland surface area (excluding open water areas)		
Observed plant types consistent with accepted plans		
No evidence of excessive sediment accumulation in wetland area		
Water depths consistent with accepted plans		
No evidence of erosion on banks.		
Wetland areas clean of debris (litter, branches, etc.)		
No evidence of dumping of yard wastes into BMP		
4. Forebay		
Sediment is being collected by forebay(s)		
Forebay is not in need of cleanout (less than 50% full)		

Actions to be Taken:_____

Infiltration Trench Operation, Maintenance, and Management Inspection Checklist

Project: _____

Location: _____

Date: _____ **Time:** _____

Inspector: _____ **Title:** _____

Signature: _____

Maintenance Item	Satisfactory/ Unsatisfactory	Comments
1. Debris Cleanout		
Trench surface clear of debris		
Inflow pipes clear of debris		
Overflow spillway clear of debris		
Inlet area clear of debris		
2. Sediment Traps or Forebays		
Obviously trapping sediment		
Greater than 50% of storage volume remaining		
3. Trench		
Trench dewaters between storms		
No evidence of sedimentation in trench		
Sediment accumulation doesn't yet require cleanout		
4. Inlets		
Good condition		
No evidence of erosion		

Maintenance Item	Satisfactory/ Unsatisfactory	Comments
5. Outlet/Overflow Spillway		
Good condition, no need for repair		
No evidence of erosion		
6. Aggregate Repairs		
Surface of aggregate clean		
Top layer of stone does not need replacement		
Trench does not need rehabilitation		

Actions to be Taken:_____

Infiltration Basin Operation, Maintenance, and Management Inspection Checklist

Project: _____

Location: _____

Date: _____ **Time:** _____

Inspector: _____ **Title:** _____

Signature: _____

Maintenance Item	Satisfactory/ Unsatisfactory	Comments
1. Debris Cleanout		
Basin bottom clear of debris		
Inlet clear of debris		
Outlet clear of debris		
Emergency spillway clear of debris		
2. Sediment Traps or Forebays		
Obviously trapping sediment		
Greater than 50% of storage volume remaining		
3. Vegetation		
Mowing done when needed		
No evidence of erosion		
4. Dewatering		
Basin dewatered between storms		

Maintenance Item	Satisfactory/ Unsatisfactory	Comments
5. Sediment Cleanout of Basin		
No evidence of sedimentation		
Sediment accumulation does not yet require cleanout		
6. Inlets		
Good condition		
No evidence of erosion		
7. Outlets/Overflow Spillway		
Good condition, no need for repair		
No evidence of erosion		
8. Structural Repairs		
Embankment in good repair		
Side slopes are stable		
No evidence of erosion		
9. Fences/Access Repairs		
Fences in good condition		
No damage which would allow undesirable entry		
Lock and gate function adequate		
Access point in good condition		

Actions to be Taken:_____

Media Filtration Operation, Maintenance, and Management Inspection Checklist

Project: _____

Location: _____

Date: _____ **Time:** _____

Inspector: _____ **Title:** _____

Signature: _____

Maintenance Item	Satisfactory/ Unsatisfactory	Comments
1. Debris Cleanout		
Contributing areas clean of debris		
Filtration facility clean of debris		
Inlet and outlets clear of debris		
2. Oil and Grease		
No evidence of filter surface clogging		
Activities in drainage area minimize oil and grease entry		
3. Vegetation		
Contributing drainage area stabilized		
No evidence of erosion		
Area mowed and clippings removed		
4. Water Retention Where Required		
Water holding chambers at normal pool		
No evidence of leakage		

Actions to be Taken:_____

_____

_____

_____

_____

Filter Strip Operation, Maintenance, and Management Inspection Checklist

Project: _____

Location: _____

Date: _____ **Time:** _____

Inspector: _____ **Title:** _____

Signature: _____

Maintenance Item	Satisfactory/ Unsatisfactory	Comments
1. Vegetation		
Observed plant types consistent with accepted plans		
Vegetation is healthy		
Plants covering greater than 85% of total BMP surface area		
Grass height not more than 6 inches		
No evidence of concentrated flows		
No evidence of erosion		
2. Level Spreader		
Lip of spreader showing no signs of erosion		
Sediment noted in spreader?		

Actions to be Taken:_____

_____

_____

_____

_____

_____

_____

_____

_____

_____

_____

Vegetated Swale Operation, Maintenance, and Management Inspection Checklist

Project: _____

Location: _____

Date: _____ **Time:** _____

Inspector: _____ **Title:** _____

Signature: _____

Maintenance Item	Satisfactory/ Unsatisfactory	Comments
1. Debris Cleanout		
Contributing drainage areas free from debris		
2. Vegetation		
Mowing performed when needed		
No evidence of erosion		
3. Check Dams or Energy Dissipaters		
No evidence of flow going around structure		
No evidence of erosion at the downstream toe		
Soil permeability		
4. Sediment Forebay		
Sediment cleanout not needed (clean out when 50% full)		

Actions to be Taken:_____

_____

_____

_____

_____

_____

_____

_____

_____

Detention Pond Operation, Maintenance, and Management Inspection Checklist

Project: _____

Location: _____

Date: _____ **Time:** _____

Inspector: _____ **Title:** _____

Signature: _____

Maintenance Item	Satisfactory/ Unsatisfactory	Comments
1. Embankment and emergency spillway		
Healthy vegetation with at least 85% ground cover.		
No signs of erosion on embankment.		
No animal burrows.		
Embankment is free of cracking, bulging, or sliding.		
Embankment is free of woody vegetation.		
Embankment is free of leaks or seeps		
Emergency spillway is clear of obstructions.		
Vertical/horizontal alignment of top of dam "As-Built"		
2. Riser and principal spillway		
Low flow outlet free of obstruction.		
Trash rack is not blocked or damaged.		
Riser is free of excessive sediment buildup		
Outlet pipe is in good condition.		
Control valve is operational		
Outfall channels are stable and free of scouring.		

Maintenance Item	Satisfactory/ Unsatisfactory	Comments
3. Permanent Pool (Wet Ponds)		
No Evidence of undesirable vegetation		
No accumulation of floating or floatable debris		
No evidence of shoreline scour or erosion		
4. Sediment Forebays		
Sediment is being collected by forebay(s)		
Forebay is not in need of cleanout (less than 50% full)		
5. Dry Pond Areas		
Healthy vegetation with at least 85% ground cover.		
No undesirable woody vegetation		
Low flow channels clear of obstructions		
No evidence of sediment and/or trash accumulation		
6. Condition of Outfall into Ponds		
No riprap failures		
No evidence of slope erosion or scouring		
Storm drain pipes are in good condition, with no evidence of non-stormwater discharges		
Endwalls/Headwalls are in good condition		

APPENDIX C

CONSTRUCTION BMPs

BMP CN – 101
CONSTRUCTION SEQUENCING

DESCRIPTION

The construction sequence schedule is an orderly listing of all major land-disturbing activities together with the necessary erosion and sedimentation control measures planned for the project. This type of schedule guides the contractor on work to be done before other work is started so that serious erosion and sedimentation problems can be avoided. Sequencing a construction project reduces the amount and duration of soil exposed to erosion by wind, rain, runoff, and vehicle tracking.

ADVANTAGE

1. Following a specified work schedule that coordinates the timing of land-disturbing activities and the installation of control measures is perhaps the most cost-effective way of controlling erosion during construction. The removal of surface ground cover leaves a site vulnerable to accelerated erosion. Construction procedures that limit land clearing, provide timely installation of erosion and sedimentation controls, and restore protective cover quickly can significantly reduce the erosion potential of a site.

DESIGN CRITERIA

1. Avoid rainy periods.
2. Schedule projects to disturb only small portions of the site at any one time. Complete grading as soon as possible. Immediately stabilize the disturbed portion before grading the next portion. Practice staged seeding in order to revegetate cut and fill slopes as the work progresses.

REFERENCE

City of Tacoma, Surface Water Management Manual, 2003 or later

BMP CN – 102
WHEEL WASH

DESCRIPTION

When a stabilized construction entrance is not preventing sediment from being tracked onto pavement, a wheel wash may be installed. Wheel washing is generally an effective BMP when installed with careful attention to topography. For example, a wheel wash can be detrimental if installed at the top of a slope abutting a right-of-way where the water from the dripping truck can run unimpeded into the street. Pressure washing combined with an adequately sized and surfaced pad with direct drainage to a large 10-foot x 10-foot sump can be very effective.

ADVANTAGES

1. Wheel washes reduce the amount of sediment transported onto paved roads by motor vehicles.

DESIGN CRITERIA

1. Suggested details are shown in Figure CN-102-A. The Lake County Surveyor may allow other designs.
2. A minimum of 6 inches of asphalt treated base (ATB) over crushed base material or 8 inches over a good subgrade is recommended to pave the wheel wash.
3. Use a low clearance truck to test the wheel wash before paving. Either a belly dump or lowboy will work well to test clearance.
4. Keep the water level from 12 to 14 inches deep to avoid damage to truck hubs and filling the truck tongues with water.
5. Midpoint spray nozzles are only needed in extremely muddy conditions.
6. Wheel wash systems should be designed with a small grade change, 6 to 12 inches for a 10-foot-wide pond, to allow sediment to flow to the low side of pond to help prevent re-suspension of sediment.
7. A drainpipe with a 2- to 3-foot riser should be installed on the low side of the pond to allow for easy cleaning and refilling.
8. Polymers may be used to promote coagulation and flocculation in a closed-loop system. Polyacrylamide (PAM) added to the wheel wash water at a rate of 0.25 - 0.5 pounds per 1,000 gallons of water increases effectiveness and reduces cleanup time.
9. If PAM is already being used for dust or erosion control and is being applied by a water truck, the same truck can be used to change the wash water.
10. The wheel wash should start out the day with fresh water. The wash water should be changed a minimum of once per day.
11. On large earthwork jobs where more than 10-20 trucks per hour are expected, the wash water will need to be changed more often.
12. Wheel wash or tire bath wastewater shall be discharged to a separate on-site treatment system, such as closed-loop recirculation or land application, or to the sanitary sewer with proper local sewer utility approval.

REFERENCE

City of Tacoma, Surface Water Management Manual, 2003 or later

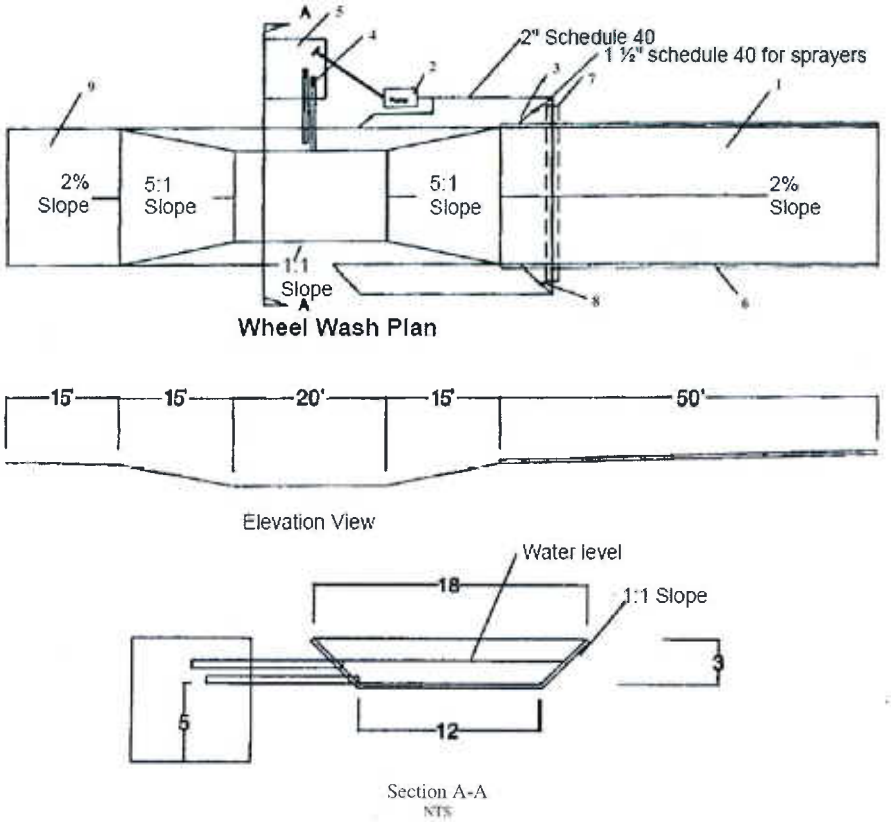

Notes:

1. Asphalt construction entrance 6 in. asphalt treated base (ATB).
2. 3-inch trash pump with floats on the suction hose.
3. Midpoint spray nozzles, if needed.
4. 6-inch sewer pipe with butterfly valves. Bottom one is a drain. Locate top pipe's invert 1 foot above bottom of wheel wash.
5. 8 foot x 8 foot sump with 5 feet of catch. Build so can be cleaned with trackhoe.
6. Asphalt curb on the low road side to direct water back to pond.
7. 6-inch sleeve under road.
8. Ball valves.
9. 15 foot. ATB apron to protect ground from splashing water.

Figure CN-102-A

BMP CN – 103
DEWATERING STRUCTURE

DESCRIPTION

Water which is pumped from a construction site usually contains a large amount of sediment. A dewatering structure is designed to remove the sediment before water is released off-site.

This practice includes several types of dewatering structures which have different applications dependent upon site conditions and types of operation. Other innovative techniques for accomplishing the same purpose are encouraged, but only after specific plans and details are submitted to and approved by the Lake County Drainage Board.

DESIGN CRITERIA

1. A dewatering structure must be sized (and operated) to allow pumped water to flow through the filtering device without overtopping the structure.
2. Material from any required excavation shall be stored in an area and protected in a manner that will prevent sediments from eroding and moving off-site.
3. An excavated basin (applicable to "Straw Bale/Silt Fence Pit") may be lined with filter fabric to help reduce scour and to prevent the inclusion of soil from within the structure.
4. Design criteria more specific to each particular dewatering device can be found in Figures CN-103-A through CN-103-C.
5. A dewatering structure may not be needed if there is a well-stabilized, vegetated area onsite to which water may be discharged. The area must be stabilized so that it can filter sediment and at the same time withstand the velocity of the discharged water without eroding. A minimum filtering length of 75 feet must be available in order for such a method to be feasible.
6. The filtering devices must be inspected frequently and repaired or replaced once the sediment build-up prevents the structure from functioning as designed.
7. The accumulated sediment which is removed from a dewatering device must be spread on-site and stabilized or disposed of at an approved disposal site as per approved plan.

<u>Portable Sediment Tank (see Figure CN103-A)</u>

- The structure may be constructed with steel drums, sturdy wood or other material suitable for handling the pressure exerted by the volume of water.
- Sediment tanks will have a minimum depth of 2 ft.
- The sediment tank shall be located for easy clean-out and disposal of the trapped sediment and to minimize the interference with construction activities.
- The following formula shall be used to determine the storage volume of the sediment tank:

  Pump discharge (gallons/min.) x 16 = cubic feet of storage required

- Once the water level nears the top of the tank, the pump must be shut off while the tank drains and additional capacity is made available.
- The tank shall be designed to allow for emergency flow over top of the tank. Clean-out of the tank is required once one-third of the original capacity is depleted due to sediment accumulation. The tank shall be clearly marked showing the clean-out point.

Filter Box (see Figure CN-103-B)

- The box selected should be made of steel, sturdy wood or other materials suitable to handle the pressure requirements imposed by the volume of water. Normally readily available 55 gallon drums welded top to bottom will suffice in most cases.
- Bottom of the box shall be made porous by drilling holes (or some other method).
- Coarse aggregate shall be placed over the holes at a minimum depth of 12 inches, metal "hardware" cloth may need to be placed between the aggregate and the holes if holes are drilled larger than the majority of the stone.
- As a result of the fast rate of flow of sediment-laden water through the aggregate, the effluent must be directed over a well-vegetated strip of at least 50 feet after leaving the base of the filter box.
- The box shall be sized as follows:

  Pump discharge (gallons/min.) x 16 = cubic feet of storage required

- Once the water level nears the top of the box, the pump must be shut off while the box drains and additional capacity is made available.
- The box shall be designed/constructed to allow for emergency flow over the top of this box.
- Clean-out of the box is required once one-third of the original capacity is depleted due to sediment accumulation. The tank shall be clearly marked showing the clean-out point.
- If the stone filter does become clogged with sediment so that it no longer adequately performs its function, the stones must be pulled away from the inlet, cleaned and replaced.
- Using a filter box only allows for minimal settling time for sediment particles; therefore, it should only be used when site conditions restrict the use of the other methods.

Straw Bale/Silt Fence Pit (see Figure CN-103-C)

- Measure shall consist of straw bales, silt fence, a stone outlet (a combination of riprap and aggregate) and a wet storage pit oriented as shown in Figure CN-103-C.
- The structure must have a capacity which is dictated by the following formula:

  Pump discharge (gallons/min.) x 16 = cubic feet of storage required

- In calculating the capacity, one should include the volume available from the floor of the excavation to the crest of the stone weir.
- In any case, the excavated area should be a minimum of 3 feet below the base of the perimeter measures (straw bales or silt fence).
- The perimeter measures must be installed as per the guidelines found in BMP-4, STRAW BALE BARRIER and BMP-5, SILT FENCE.
- Once the water level nears the crest of the stone weir (emergency overflow), the pump must be shut off while the structure drains down to the elevation of the wet storage.
- The wet storage pit may be dewatered only after a minimum of 6 hours of sediment settling time. This effluent should be pumped across a well vegetated area or through a silt fence prior to entering a watercourse.
- Once the wet storage area becomes filled to one-half of the, excavated depth, accumulated sediment shall be removed and properly disposed of.

- Once the device has been removed, ground contours will be returned to original condition.

REFERENCE

United States Army Corps of Engineers, Handbook for the Preparation of Storm Water Pollution Prevention Plans for Construction Activities, 1997 or later

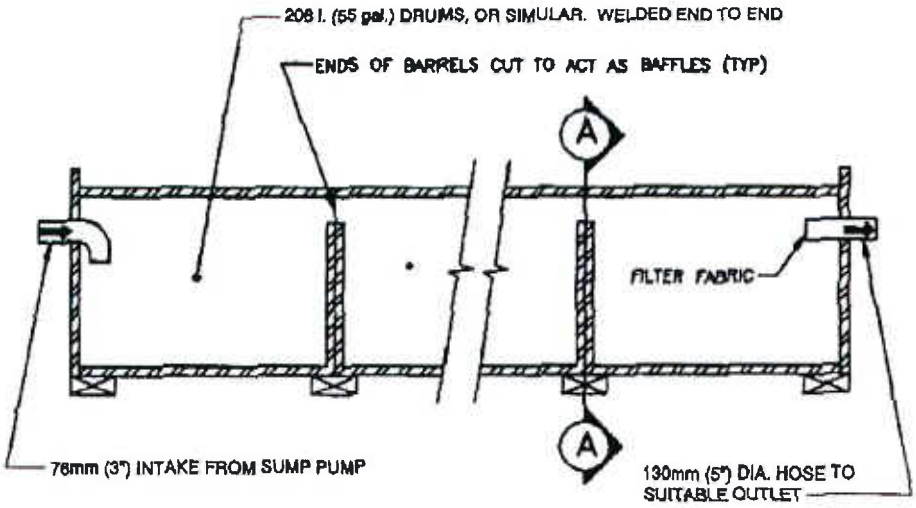

ELEVATION

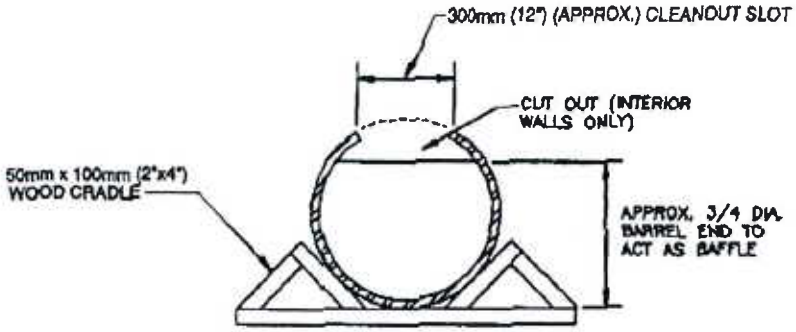

CROSS-SECTION A-A

Figure CN-103-A
Portable Sediment Tank

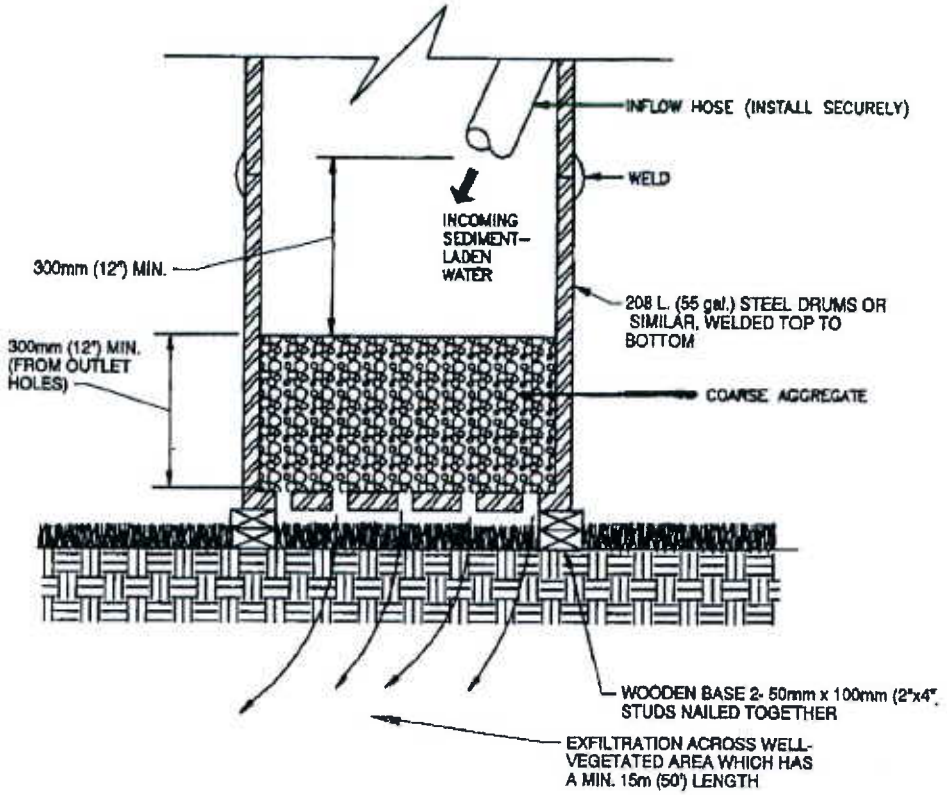

ELEVATION VIEW

Figure CN-103-B
Filter Box

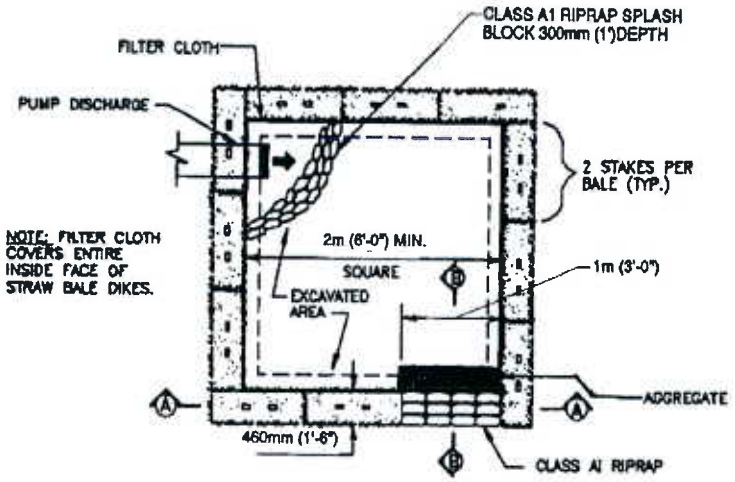

PLAN VIEW

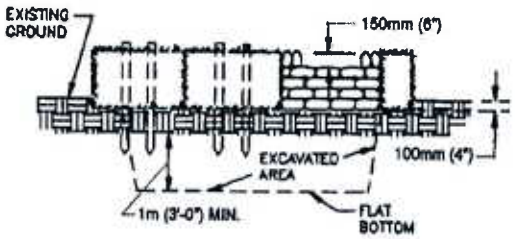

CROSS-SECTION A-A

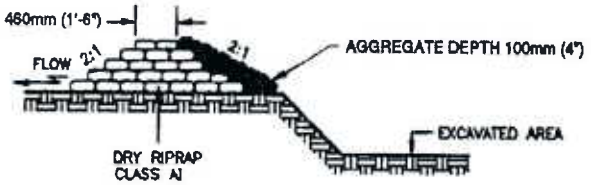

CROSS-SECTION B-B

Figure CN-103-C
Straw Bale/Silt Fence Pit

BMP CN – 104
SPILL PREVENTION AND CONTROL

DESCRIPTION

These procedures and practices are implemented to prevent and control spills in a manner that minimizes or prevents the discharge of spilled material to the drainage system or watercourses.

This best management practice (BMP) applies to all construction projects. Spill control procedures are implemented anytime chemicals and/or hazardous substances are stored. Substances may include, but are not limited to:

- Soil stabilizers/binders
- Dust Palliatives
- Herbicides
- Growth inhibitors
- Fertilizers
- Deicing/anti-icing chemicals
- Fuels
- Lubricants
- Other petroleum distillates

To the extent that the work can be accomplished safely, spills of oil, petroleum products, sanitary and septic wastes, and substances listed under 40 CFR parts 110, 117, and 302, and shall be contained and cleaned up immediately.

LIMITATIONS

1. This BMP only applies to spills caused by the contractor.
2. Procedures and practices presented in this BMP are general. Contractor shall identify appropriate practices for the specific materials used or stored on-site in advance of their arrival at the site.

DESIGN CRITERIA

1. To the extent that it doesn't compromise clean up activities, spills shall be covered and protected from stormwater runoff during rainfall.
2. Spills shall not be buried or washed with water.
3. Used clean up materials, contaminated materials, and recovered spill material that is no longer suitable for the intended purpose shall be stored and disposed of in conformance with BMP CN-106: Hazardous Waste Management.
4. Water used for cleaning and decontamination shall not be allowed to enter storm drains or watercourses and shall be collected and disposed of in accordance with BMP CN-106: Hazardous Waste Management.
5. Water overflow or minor water spillage shall be contained and shall not be allowed to discharge into drainage facilities or watercourses.

6. Proper storage, clean-up and spill reporting instruction for hazardous materials stored or used on the project site shall be posted at all times in an open, conspicuous and accessible location.
7. Waste storage areas shall be kept clean, well organized and equipped with ample clean-up supplies as appropriate for the materials being stored. Perimeter controls, containment structures, covers and liners shall be repaired or replaced as needed to maintain proper function.
8. Verify weekly that spill control and clean up materials are located near material storage, unloading, and use areas.
9. Update spill prevention and control plans and stock appropriate clean-up materials whenever changes occur in the types of chemicals used or stored onsite.

Cleanup and Storage Procedures for Minor Spills

- Minor spills typically involve small quantities of oil, gasoline, paint, etc., which can be controlled by the first responder at the discovery of the spill.
- Use absorbent materials on small spills rather than hosing down or burying the spill.
- Remove the absorbent materials promptly and dispose of properly.
- The practice commonly followed for a minor spill is:
  - Contain the spread of the spill.
  - Recover spilled materials.
  - Clean the contaminated area and/or properly dispose of contaminated materials.

Cleanup and Storage Procedures for Semi-Significant Spills

- Semi-significant spills still can be controlled by the first responder along with the aid of other personnel such as laborers and the foreman, etc. This response may require the cessation of all other activities.
- Clean up spills immediately:
- Notify the project foreman immediately. The foreman shall notify the Lake County Emergency Management Agency's Hazardous Materials Response Team.
- Contain spread of the spill.
- If the spill occurs on paved or impermeable surfaces, clean up using "dry" methods (absorbent materials, cat litter and/or rags). Contain the spill by encircling with absorbent materials and do not let the spill spread widely.
- If the spill occurs in dirt areas, immediately contain the spill by constructing an earthen dike. Dig up and properly dispose of contaminated soil.
- If the spill occurs during rain, cover spill with tarps or other material to prevent contaminating runoff.

Cleanup and Storage Procedures for Significant/Hazardous Spills

- For significant or hazardous spills that cannot be controlled by personnel in the immediate vicinity, notify the local emergency response by dialing 911. In addition to 911, the contractor will notify the proper county officials. It is the contractor's responsibility to have all emergency phone numbers at the construction site.

- For spills of federal reportable quantities, in conformance with the requirements in 40 CFR parts 110,119, and 302, the contractor shall notify the National Response Center at (800) 424-8802.
- Notification shall first be made by telephone and followed up with a written report.
- The services of a spills contractor or a Haz-Mat team shall be obtained immediately. Construction personnel shall not attempt to clean up the spill until the appropriate and qualified personnel have arrived at the job site.

REFERENCE

California Department of Transportation, Construction Site BMP Manual, 2000 or later

BMP CN – 105
SOLID WASTE MANAGEMENT

DESCRIPTION

Solid waste management procedures and practices are designed to minimize or eliminate the discharge of pollutants to the drainage system or to watercourses as a result of the creation, stockpiling, or removal of construction site wastes.

Solid waste management procedures and practices are implemented on all construction projects that generate solid wastes.

Solid wastes include but are not limited to:

1. Construction wastes including brick, mortar, timber, steel and metal scraps, sawdust, pipe and electrical cuttings, non-hazardous equipment parts, Styrofoam and other materials used to transport and package construction materials.
2. Landscaping wastes, including vegetative material, plant containers, and packaging materials.
3. Litter, including food containers, beverage cans, coffee cups, paper bags, plastic wrappers, and smoking materials, including litter generated by the public.

LIMITATIONS

1. Temporary stockpiling of certain construction wastes may not necessitate stringent drainage related controls during the non-rainy season.

DESIGN CRITERIA

1. Dumpsters of sufficient size and number shall be provided to contain the solid waste generated by the project and properly serviced.
2. Littering on the project site shall be prohibited.
3. To prevent clogging of the storm drainage system, litter and debris removal from drainage grates, trash racks, and ditch lines shall be a priority.
4. Trash receptacles with lids shall be provided in the Contractor's yard, field trailer areas, and at locations where workers congregate for lunch and break periods.
5. Construction debris and litter from work areas within the construction limits of the project site shall be collected and placed in watertight dumpsters at least weekly regardless of whether the litter was generated by the Contractor, the public, or others. Collected litter and debris shall not be placed in or next to drain inlets, storm water drainage systems or watercourses.
6. Full dumpsters shall be removed from the project site and the contents shall be disposed of, off-site, in an appropriate manner.;
7. Litter stored in collection areas and containers shall be handled and disposed of by trash hauling contractors.
8. Construction debris and waste shall be removed from the site every two weeks.
9. Stormwater run-off shall be prevented from contacting stored solid waste through the use of berms, dikes, or other temporary diversion structures or through the use of measures to elevate waste from site surfaces.
10. Solid waste storage areas shall be located at least 50 ft from drainage facilities and watercourses and shall not be located in areas prone to flooding or ponding.

11. Except during fair weather, construction and landscaping waste not stored in watertight dumpsters shall be securely covered from wind and rain by covering the waste with tarps, plastic sheeting, or equivalent.
12. Dumpster washout on the project site is not allowed.
13. Notify trash hauling contractors that only watertight dumpsters are acceptable for use on-site.
14. Plan for additional containers during the demolition phase of construction.
15. Plan for more frequent pickup during the demolition phase of construction.
16. Construction waste shall be stored in a designated area. Access to the designated area shall either be well vegetated ground, a concrete or asphalt road or drive, or a gravel construction entrance, to avoid mud tracking by trash hauling contractors.
17. Segregate potentially hazardous waste from non-hazardous construction site waste.
18. Keep the site clean of litter debris.
19. Make sure that toxic liquid wastes (e.g., used oils, solvents, and paints) and chemicals (e.g., acids, pesticides, additives, curing compounds) are not disposed of in dumpsters designated for construction debris.
20. For disposal of hazardous waste, see BMP CN-106: Hazardous Waste Management. Have hazardous waste hauled to an appropriate disposal and/or recycling facility.
21. Salvage or recycle useful vegetation debris, packaging and/or surplus building materials when practical. For example, trees and shrubs from land clearing can be converted into wood chips, then used as mulch on graded areas. Wood pallets, cardboard boxes, and construction scraps can also be recycled.
22. Prohibit littering by employees, subcontractors, and visitors.
23. Wherever possible, minimize production of solid waste materials.

REFERENCE

California Department of Transportation, Construction Site BMP Manual, 2000 or later

BMP CN – 106
HAZARDOUS WASTE MANAGEMENT

DESCRIPTION

These are procedures and practices to minimize or eliminate the discharge of pollutants from construction site hazardous waste to the storm drain systems or to watercourses.

This best management practice (BMP) applies to all construction projects.

Hazardous waste management practices are implemented on construction projects that generate waste from the use of:

- Petroleum Products,
- Asphalt Products,
- Concrete Curing Compounds,
- Pesticides,
- Acids,
- Paints,
- Stains,
- Solvents,
- Wood Preservatives,
- Roofing Tar, or
- Any materials deemed a hazardous waste in 40 CFR Parts 110, 117, 261, or 302.

DESIGN CRITERIA

Storage Procedures

1. Wastes shall be stored in sealed containers constructed of a suitable material and shall be labeled as required by 49 CFR Parts 172,173, 178, and 179.
2. All hazardous waste shall be stored, transported, and disposed as required in 49 CFR 261-263.
3. Waste containers shall be stored in temporary containment facilities that shall comply with the following requirements:
   - Temporary containment facility shall provide for a spill containment volume able to contain precipitation from a 24-hour, 25 year storm event, plus the greater of 10% of the aggregate volume of all containers or 100% of the capacity of the largest tank within its boundary, whichever is greater.
   - Temporary containment facility shall be impervious to the materials stored there for a minimum contact time of 72 hours.
   - Temporary containment facilities shall be maintained free of accumulated rainwater and spills. In the event of spills or leaks accumulated rainwater and spills shall be placed into drums after each rainfall. These liquids shall be handled as a hazardous waste unless testing determines them to be non-hazardous. Non-hazardous liquids shall be sent to an approved disposal site.
   - Sufficient separation shall be provided between stored containers to allow for spill cleanup and emergency response access.
   - Incompatible materials, such as chlorine and ammonia, shall not be stored in the same temporary containment facility.

- Throughout the rainy season, temporary containment facilities shall be covered during non-working days, and prior to rain events. Covered facilities may include use of plastic tarps for small facilities or constructed roofs with overhangs. A storage facility having a solid cover and sides is preferred to a temporary tarp. Storage facilities shall be equipped with adequate ventilation.

4. Drums shall not be overfilled and wastes shall not be mixed.
5. Unless watertight, containers of dry waste shall be stored on pallets.
6. Paint brushes and equipment for water and oil based paints shall be cleaned within a contained area and shall not be allowed to contaminate site soils, watercourses or drainage systems. Waste paints, thinners, solvents, residues, and sludge that cannot be recycled or reused shall be disposed of as hazardous waste. When thoroughly dry, latex paint and paint cans, used brushes, rags, absorbent materials, and drop cloths shall be disposed of as solid waste.
7. Ensure that adequate hazardous waste storage volume is available.
8. Ensure that hazardous waste collection containers are conveniently located.
9. Designate hazardous waste storage areas on site away from storm drains or watercourses and away from moving vehicles and equipment to prevent accidental spills.
10. Minimize production or generation of hazardous materials and hazardous waste on the job site.
11. Use containment berms in fueling and maintenance areas and where the potential for spills is high.
12. Segregate potentially hazardous waste from non-hazardous construction site debris.
13. Keep liquid or semi-liquid hazardous waste in appropriate containers (closed drums or similar) and under cover.
14. Clearly label all hazardous waste containers with the waste being stored and the date of accumulation.
15. Place hazardous waste containers in secondary containment.
16. Do not allow potentially hazardous waste materials to accumulate on the ground.
17. Do not mix wastes.

Disposal Procedures

1. Waste shall be removed from the site within 90 days of being generated.
2. Waste shall be disposed of by a licensed hazardous waste transporter at an authorized and licensed disposal facility or recycling facility utilizing properly completed Uniform Hazardous Waste Manifest forms.
3. A certified laboratory shall sample waste and classify it to determine the appropriate disposal facility.
4. Make sure that toxic liquid wastes (e.g., used oils, solvents, and paints) and chemicals (e.g., acids, pesticides, additives, curing compounds) are not disposed of in dumpsters designated for solid waste construction debris.
5. Properly dispose of rainwater in secondary containment that may have mixed with hazardous waste.
6. Recycle any useful material such as used oil or water-based paint when practical.

Maintenance and Inspection

1. A foreman and/or construction supervisor shall monitor on-site hazardous waste storage and disposal procedures.
2. Waste storage areas shall be kept clean, well organized, and equipped with ample clean-up supplies as appropriate for the materials being stored.

3. Storage areas shall be inspected in conformance with the provisions in the contract documents.
4. Perimeter controls, containment structures, covers, and liners shall be repaired or replaced as needed to maintain proper function.
5. Hazardous spills shall be cleaned up and reported in conformance with the applicable Material Safety Data Sheet (MSDS) and the instructions posted at the project site.
6. The National Response Center, at (800) 424-8802, shall be notified of spills of Federal reportable quantities in conformance with the requirements in 40 CFR parts 110, 117, and 302.
7. Copy of the hazardous waste manifests shall be provided to the Owner.

REFERENCE

California Department of Transportation, Construction Site BMP Manual, 2000 or later

Appendix D
Post-Construction BMPs

BMP PC – 101
BIORETENTION FACILITY

DESCRIPTION

Bioretention is a best management practice (BMP) developed in the early 1990's by the Prince George's County, MD, Department of Environmental Resources (PGDER). Bioretention utilizes soils and both woody and herbaceous plants to remove pollutants from stormwater runoff. As shown in Figure 10-1, runoff is conveyed as sheet flow to the treatment area, which consists of a grass buffer strip, sand bed, ponding area, organic layer or mulch layer, planting soil, and plants. Runoff passes first over or through a sand bed, which slows the runoff's velocity, distributes it evenly along the length of the ponding area, which consists of a surface organic layer and/or ground cover and the underlying planting soil. The ponding area is graded; its center depressed. Water is ponded to a depth of 6 inches and gradually infiltrates the bioretention area and/or is evapotranspired. Bioretention areas are applicable as on-lot retention facilities that are designed to mimic forested systems that naturally control hydrology. The bioretention area is graded to drain excess runoff over a weir and into the storm drain system. Stored water in the bioretention area planting soil infiltrates over a period of days into the underlying soils.

The basic bioretention design shown below can be modified to accommodate more specific needs. The bioretention BMP design can be modified to include an underdrain within the sand bed to collect the infiltrated water and discharge it to a downstream storm drain system. This modification may be required when impervious subsoils and marine clays prevent complete infiltration in the soil system. This modified design makes the bioretention area act more as a filter that discharges treated water than as an infiltration device.

COMPONENTS

1. Grass Buffer Strip -Designed to filter out particulates and reduce runoff velocity.
2. Sand Bed -Further reduces velocity by capturing a portion of the runoff and distributes it evenly along the length of the ponding area. Also provides aeration to the plant bed and enhances infiltration.
3. Ponding Area -Collects and stores runoff prior to infiltration.
4. Organic/Mulch Layer -Provides some filtering of runoff, encourages development of beneficial microorganisms, and protects the soil surface from erosion.
5. Planting Soil -Provides nourishment for the plant life. Clay particles within the soil also remove certain pollutants through adsorption.
6. Plants -Provides uptake of harmful pollutants.

ADVANTAGES

1. If designed properly, has shown ability to remove significant amounts of dissolved heavy metals, phosphorous, TSS, and fine sediments.
2. Requires relatively little engineering design in comparison to other stormwater management facilities (e.g. sand filters).
3. Provides groundwater recharge when the runoff is allowed to infiltrate into the subsurface.
4. Enhances the appearance of parking lots and provides shade and wind breaks, absorbs noise, and improves an area's landscape.

5. Maintenance on a bioretention facility is limited to the removal of leaves from the bioretention area each fall.
6. The vegetation recommended for use in bioretention facilities is generally hardier than the species typically used in parking lot landscapes. This is a particular advantage in urban areas where plants often fare poorly due to poor soils and air pollution.

LIMITATIONS

1. Low removal of nitrates.
2. Not applicable on steep, unstable slopes or landslide areas (slopes greater than 20 percent).
3. Requires relatively large areas.
4. Not appropriate at locations where the water table is within 6 feet of the ground surface and where the surrounding soil stratum is unstable.
5. Clogging may be a problem, particularly if the BMP receives runoff with high sediment loads.

DESIGN CRITERIA

1. Calculate the volume of stormwater to be mitigated by the bioretention facility using the water quality volume calculations outlined in Chapter 9.
2. The soil should have infiltration rates greater than 0.5 inches per hour, otherwise an underdrain system should be included (see # 11).
3. Drainage to the bioretention facility must be graded to create sheet flow, not a concentrated stream. Level spreaders (i.e. slotted curbs) can be used to facilitate sheet flow. The maximum sheet flow velocity should be 1 ft/s for the planted ground cover and 3 ft/s for mulched cover.
4. Soil shall be a uniform mix, free of stones, stumps, roots or other similar objects larger than 1-inch in diameter. No other materials or substances shall be mixed or dumped within the bioretention area that may be harmful to plant growth, or prove a hindrance to the planting or maintenance operations. The planting soil shall be free of noxious weeds.
5. Planting soil shall be tested and meet the following criteria:

Planting Soil Criteria	
pH range	5.2-7.0
Organic matter	1.5-4.0%
Magnesium	35 lbs. per acre, minimum
Phosphorus P_2O_5	75 lbs. per acre, minimum
Potassium K_2O	85 lbs. per acre, minimum
Soluble salts	not to exceed 500 ppm
Clay	0-25% by volume
Silt	30-55% by volume
Sand	35-60% by volume

6. It is very important to minimize compaction of both the base of the bioretention area and the required backfill. When possible, use excavation hoes to remove original soil. If excavated using a loader, the excavator should use a wide track or marsh track equipment, or light equipment with turf type tires. Use of equipment with narrow tracks or narrow tires, rubber tires with large lugs, or high pressure tires will cause excessive

compaction resulting in reduced infiltration rates and storage volumes and is not acceptable. Compaction will significantly contribute to design failure.

7. Compaction can be alleviated at the base of the bioretention facility by using a primary tilling operation such as a chisel plow, ripper, or subsoiler. These tilling operations are to refracture the soil profile through the 12 inch compaction zone. Substitute methods must be approved by the engineer. Rototillers typically do not till deep enough to reduce the effects of compaction from heavy equipment. Rototill 2 to 3 inches of sand into the base of the bioretention facility before back filing the required sand layer. Pump any ponded water before preparing (rototilling) base.
8. When back filling topsoil over the sand layer, first place 3 to 4 inches of topsoil over the sand, then rototill the sand/topsoil to create a gradation zone. Backfill the remainder of the topsoil to final grade.
9. Mulch around individual plants only. Shredded hardwood mulch is the only accepted mulch. Shredded hardwood mulch must be well aged (stockpiled or stored for at least 12 months) for acceptance. The mulch should be applied to a maximum depth of 3-inches.
10. The plant root ball should be planted so 1/8th of the ball is above final grade surface.
11. If used, place underdrains on a 3 feet wide section of filter cloth followed by a gravel bedding. Pipe is placed next, followed by the gravel bedding. The ends of underdrain pipes not terminating in an observation well shall be capped.
12. The main collector pipe for underdrain systems shall be constructed at a minimum slope of 0.5%. Observation wells and/or clean-out pipes must be provided (one minimum per every 1,000 square feet of surface area).
13. Size an emergency overflow weir with 6-inches of head, using the Weir equation: $Q=CLH^{3/2}$ Where C= 2.65 (smooth crested grass weir)
    Q= flow rate H = 6-inches of head L = length of weir
14. Bioretention areas should be at least 15 feet wide with a 25 foot width preferable, and a minimum length of 40 feet long. Generally, the length-to-width ratio should be around 2 to 1 to improve surface flow characteristics.
15. The plant soil depth should be 4 feet or more to provide beneficial root zone, both in terms of space and moisture content.
16. The depth of the ponding area should be limited to no more than 6 inches to limit the duration of standing water to no more than 4 days. If an underdrain system is used, the depth of the ponding area should be limited to no more than 1 foot. Longer ponding times can lead to anaerobic conditions that are not conductive to plant growth. Longer periods of standing water can also lead to the breeding of mosquitoes and other pests.
17. The bioretention area should be vegetated to resemble a terrestrial forest community ecosystem, which is dominated by understory trees, a shrub layer, and herbaceous ground covers. Three species each of both trees and shrubs are recommended to be planted at a rate of 1000 total trees and shrubs per acre. The shrub-to-tree ratio should be 2:1 to 3:1. Trees should be spread 12 feet apart and the shrubs should be spaced 8 feet apart.

REFERENCES

1. S. Bitter and J. Keith Bowers, 1994. Bioretention as a Water Quality Best Management Practice. *Watershed Protection Techniques*, Vol. 1, No. 3. Silver Spring, MD.
2. The Center for Watershed Protection, Environmental Quality Resources and Loiederman Associates. 1997. *Maryland Stormwater Design Manual*. Prepared for: Maryland Department of the Environment. Baltimore, MD.
3. A.P. Davis, M. Shokouhian, H. Sharma, C. Minani, 1998. *Optimization of Bioretention Design for Water Quality and Hydrologic Characteristics.*

4. DEQ Storm Water Management Guidelines, Department of Environmental Quality, State of Oregon. http://waterquality.deq.state.or.us/wq/groundwa/swmgmtguide.htm

5. *Design Manual for Use of Bioretention in Stormwater Management*, 1993. Department of Environmental Resources, Division of Environmental Management, Watershed Protection Branch, Prince George's County, MD.

6. GKY and Associates, Inc. June 1996. *Evaluation and Management of Highway Runoff Water Quality*, Publication No. FHWA-PD-96-032. Prepared for: US Department of Transportation, Federal Highway Administration. Washington, DC.

7. G.L. Hightshoe, 1988. *Native Trees, Shrubs, and Vines for Urban and Rural America*. Van Nostrand Reinhold, New York, NY.

8. *Low-Impact Development Design Manual*, November 1997. Department of Environmental Resources, Prince George's County, MD.

9. *Maryland Stormwater Design Manual Volumes I & II*, December 1999 Draft. Maryland Department of the Environment, Baltimore, MD.

10. T.R. Schueler, 1987. *Controlling Urban Runoff: A Practical Manual for Planning and Designing Urban Best Management Practices*. Metropolitan Washington Council of Governments.

11. T.R. Schueler, 1992. *A Current Assessment of Urban Best Management Practices*. Metropolitan Washington Council of Governments.

12. *Manual for the Standard Urban Stormwater Mitigation Plan (SUSMP)*, Los Angeles County Department of Public Works, September 2002.

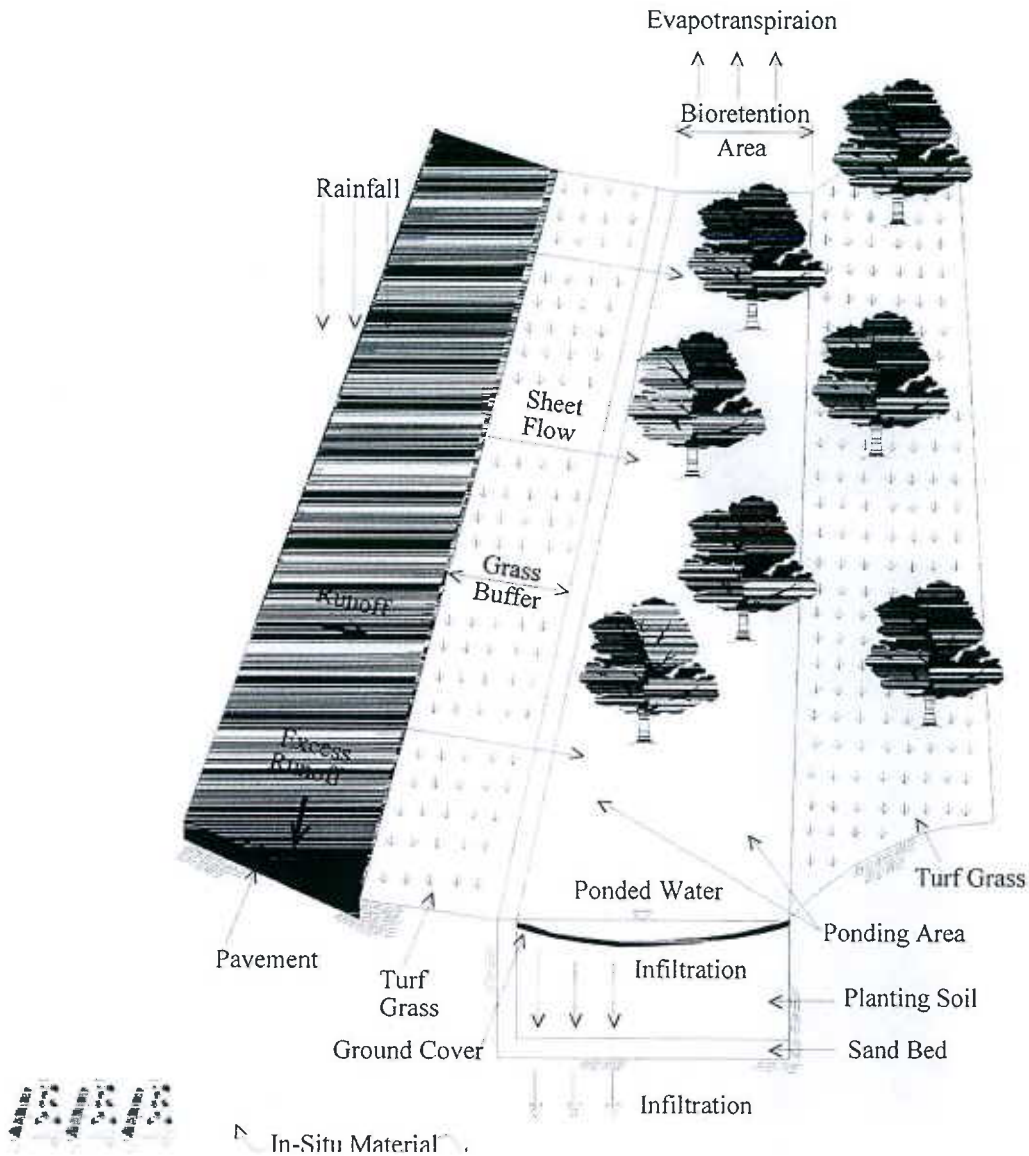

Figure PC-101A
Schematic of Bioretention Area (SUSMP, 2002)

BMP PC – 102
CATCH BASIN INSERTS

DESCRIPTION

A catch basin insert is any device that can be inserted into an existing catch basin design to provide some level of runoff contaminant removal. Currently, there are many different catch basin insert models available, with applications ranging from trash and debris removal to carbon adsorption of aliphatic and aromatic hydrocarbons and heavy metals removal. Costs vary widely. The most frequent application for catch basin inserts is for reduction of sediment, oil, and grease levels in stormwater runoff. These catch basin inserts should also have an overflow outlet, through which water exceeding the treatment capacity can escape without flooding the adjacent area.

ADVANTAGES

1. Provides moderate removal of larger particles and debris as pretreatment.
2. Low installation costs.
3. Units can be installed in existing traditional stormwater infrastructure.
4. Ease of installation.
5. Requires no additional land area.

LIMITATIONS

1. Vulnerable to accumulated sediments being resuspended at low flow rates.
2. Severe clogging potential if exposed soil surfaces exist upstream.
3. Maintenance and inspection of catch basin inserts are to be required before and after EACH future rainfall event, excessive cleaning and maintenance.
4. Available hydraulic head to meet design criteria.
5. Dissolved pollutants are not captured by filter media.
6. Limited pollutant removal capabilities.

DESIGN CRITERIA

1. Calculate the flow rate of stormwater to be mitigated by the catch basin insert using the methodology outlined in Chapter 9.
2. Insert device selected should be Best Available Technology for removing constituents of concern for the particular site.

Because of the susceptibility for clogging and extensive maintenance, the developer should pay special attention to addressing the maintenance and inspection provisions for catch basin inserts after EACH storm event (greater than 0.5" of rainfall) over the life of the development, including financial provisions for this activity. This factor often discourages the use of catch basin inserts.

REFERENCES

1. The Center for Watershed Protection, Environmental Quality Resources and Loiederman Associates. 1997. *Maryland Stormwater Design Manual*. Prepared for: Maryland

Department of the Environment. Baltimore, MD.

2. DEQ Storm Water Management Guidelines, Department of Environmental Quality, State of Oregon. http://waterquality.deq.state.or.us/wq/groundwa/swmgmtguide.htm
3. K. H. Lichten, June 1997. *Compilation of New Development Stormwater Treatment Controls in the San Francisco Bay Area*, Bay Area Stormwater Management Agencies Association, San Francisco, CA.
4. *Manual for the Standard Urban Stormwater Mitigation Plan (SUSMP)*, Los Angeles County Department of Public Works, September 2002.

BMP PC – 103
CISTERN

DESCRIPTION

Cisterns are containers which capture stormwater runoff as it comes down through the roof gutter system. The cisterns are also known as "rain barrels". Collected stormwater can later be used to water the garden or lawn. The collection of this stormwater reduces the amount of stormwater runoff and assists in the reduction of potential pollutants entering the stormwater conveyance system. In a residential application, rain barrels are incorporated into the plan for each lot. In order to be effective, there must be some provision for ensuring that the cisterns will be maintained and remain in use on each individual lot.

ADVANTAGES

1. Low installation cost.
2. Requires little space for installation.
3. Reduces amount of stormwater runoff.
4. Conserves water usage.

LIMITATIONS

1. Limited amount of stormwater runoff can be captured.
2. Restricted to structure runoff.
3. Aesthetically unpleasing.

DESIGN CRITERIA

1. Calculate the volume of stormwater to be mitigated by the cistern using the methods outlined in Chapter 9.

REFERENCES

1. *Low-Impact Development Design Manual*, November 1997. Department of Environmental Resources, Prince George's County, MD.
2. Rainwater Collection and Gray Water as alternative Water Supply Sources. http://www.mindspring.com/~roadrunner1/Family_Focus/Rainwater_Collection.html.
3. T. Richman, J. Worth, P. Dawe, J. Aldrich, and B. Ferguson, 1997. *Start at the Source: Residential Site Planning and Design Guidance Manual for Stormwater Quality Protection*, Bay Area Stormwater Management Agencies Association, San Francisco, CA.
4. *Manual for the Standard Urban Stormwater Mitigation Plan (SUSMP)*, Los Angeles County Department of Public Works, September 2002.

BMP PC – 104
CONSTRUCTED WETLANDS

DESCRIPTION

Wetlands provide physical, chemical, and biological water quality treatment of stormwater runoff. Physical treatment occurs as a result of decreasing flow velocities in the wetland, and is present in the form of evaporation, sedimentation, adsorption, and/or filtration. Chemical processes include chelation, precipitation, and chemical adsorption. Biological processes include decomposition, plant uptake and removal of nutrients, plus biological transformation and degradation. Hydrology is one of the most influential factors in pollutant removal due to its effects on sedimentation, aeration, biological transformation, and adsorption onto bottom sediments (Dormann, et al., 1988). The large surface area of the bottom of the wetland encourages higher levels of adsorption, absorption, filtration, microbial transformation, and biological utilization than might normally occur in more channelized water courses.

A natural wetland is defined by examination of the soils, hydrology, and vegetation which are dominant in the area. Wetlands are characterized by the substrate being predominantly undrained hydric soil. A wetland may also be characterized by a substrate which is non-soil and is saturated with water or covered by shallow water at some time during the growing season of each year. Wetlands also usually support hydrophytes, or plants which are adapted to aquatic and semiaquatic environments. Natural and artificial wetlands are used to treat stormwater runoff. Figure 10-2 illustrates an artificial wetland used for treating stormwater runoff.

The success of a wetland will be much more likely if some general guidelines are followed. The wetland should be designed such that a minimum amount of maintenance is required. This will be affected by the plants, animals, microbes, and hydrology. The natural surroundings, including such things as the potential energy of a stream or a flooding river, should be utilized as much as possible. It is necessary to recognize that a fully functional wetland cannot be established spontaneously. Time is required for vegetation to establish and for nutrient retention and wildlife enhancement to function efficiently. Also, the wetland should approximate a natural situation as much as possible, and unnatural attributes, such as a rectangular shape or a rigid channel, should be avoided (Mitsch and Gosselink, 1993).

1. *Natural Wetland Systems*. Existing wetlands perform storm water treatment in the same fashion as constructed wetlands. However, current policy of the Indiana Department of Environmental Management prohibit the use of existing wetlands as a pollution control measure. Therefore, the use of existing wetlands as a proposed BMP cannot be accepted under any circumstance by Lake County Surveyor without the prior written acceptance by IDEM for such proposed pollution control use.

2. Constructed *(Artificial) wetlands*. Site considerations should include the water table depth, soil/substrate, and space requirements. Because the wetland must have a source of flow, it is desirable that the water table is at or near the surface. This is not always possible. If runoff is the only source of inflow for the wetland, the water level often fluctuates and establishment of vegetation may be difficult. The soil or substrate of an

artificial wetland should be loose loam to clay. A perennial base flow must be present to sustain the artificial wetland. The presence of organic material is often helpful in increasing pollutant removal and retention.

Wetland vegetation can be categorized as either emergent, floating, or submerged. Emergent vegetation is rooted in the sediments, but grows through the water and above the water surface. Floating vegetation is not rooted in the sediments, and has aquatic roots with plant parts partly submerged or fully exposed on the water or surface. Submerged vegetation includes aquatic plants such as algae or plants rooted in the sediments, with all plant parts growing within the water column. Pollutant removal rates generally improve with an increase in the diversity of the vegetation.

The depth of inundation will contribute to the pollutant removal efficiency. Generally, shallow water depths allow for higher pollutant removal efficiencies due to an increased amount of adsorption onto bottom sediments (Dormann, et al.,1988). Flow patterns in the wetland will affect the removal efficiency also. Meandering channels, slow-moving water and a large surface area will increase pollutant removal through increased sedimentation. Shallow, sheet flow also increases the pollutant removal capabilities, through assimilative processes. A deep pool sometimes improves the denitrification potential. A mixed flow pattern will increase overall pollutant removal efficiency (Dormann, et al., 1988).

Using a site where nearby wetlands still exist is recommended if possible. A hydrologic study should be done to determine if flooding occurs and saturated soils are present. A site where natural inundation is frequent is a good potential site (Mitsch and Gosselink, 1993). Loamy soils are required to permit plants to take root (Urbonas, 1992)

ADVANTAGES

1. Constructed wetlands offer natural aesthetic qualities, wildlife habitat, erosion control, and pollutant removal.
2. Constructed wetlands can offer good treatment following treatment by other BMPs, such as wet ponds, that rely upon settling of larger sediment particles (Urbonas, 1992). They are useful for large basins when used in conjunction with other BMPs.
3. Wetlands which are permanently flooded are less sensitive to polluted water inflows because the ecosystem does not depend upon the polluted water inflow.
4. Can provide uptake of soluble pollutants such as phosphorous, through plant uptake.
5. Can be used as a regional facility.

LIMITATIONS

1. Although the use of natural wetlands may be appear to be more cost effective than the use of constructed wetlands; environmental, permitting and legal issues prohibit the use of natural wetlands for this purpose.
2. Wetlands require a continuous base flow.
3. If not properly maintained, wetlands can accumulate salts and scum which can be flushed out by large storm flows.
4. Regular maintenance, including plant harvesting, is required to provide nutrient removal.
5. Frequent sediment removal is required to maintain the proper functioning of the wetland.

6. A greater amount of space is required for a wetland system than is required for an extended/dry detention basin treating the same amount of area.
7. Although constructed wetlands are designed to act as nutrient sinks, on occasion, the wetland may periodically become a nutrient source.
8. Wetlands which are not permanently flooded are more likely to be affected by drastic changes in inflow of polluted water.
9. Cannot be used on steep unstable slopes or densely populated areas.
10. Harvested wetlands may require special disposal methods, due to heavy metal uptake.
11. Threat of mosquitoes.
12. Hydraulic capacity may be reduced with plant overgrowth.

DESIGN CRITERIA

The wetland may be designed as either a stand-alone BMP, or as part of a larger non-point source treatment facility in conjunction with other devices, such as a wet pond, sediment forebay, or infiltration basin. Basic design elements and considerations are listed below.

1. *Volume.* The wetland pond should provide a minimum permanent storage equal to three-fourths of the water quality volume. The full water quality capture volume should be provided above the permanent pool. Calculate the water quality volume to be mitigated by the wetland using the method of Chapter 9.
2. *Depth.* A constant shallow depth should be maintained in the wetland, at approximately 1 ft or less (Schueler, 1987; Boutiette and Duerring, 1994), with 0.5 ft being more desirable (Schueler, 1987). If the wetland is designed as a very shallow detention pond, the pond should provide the full water quality capture volume above the permanent pool level. The permanent wetland depth should be 6 to 12 inches deep. The depth of the water quality volume above the permanent pool should not exceed 2 ft (Urbonas, 1992). Regrading may be necessary to allow for this shallow depth over a large area.

   It may also be beneficial to create a wetland with a varying depth. A varying depth within the wetland will enable more diverse vegetation to flourish. Deep water offers a habitat for fish, creates a low velocity area where flow can be redistributed, and can enhance nitrification as a prelude to later denitrification if nitrogen removal is desired. Open-water areas may vary in depth between 2 and 4 ft (Urbonas, 1992).

3. *Surface Area.* Increasing the surface area of the pond increases the nutrient removal capability (Boutiette and Duerring, 1994). A general guideline for surface area is using a marsh area of two to three percent of the contributing drainage area. The minimum surface area of the pond can also be calculated by determining the nutrient loading to the wetland. The nutrient loading to a wetland used for stormwater treatment should not be more than 45 lbs/ac of phosphorus or 225 lbs/ac of nitrogen per year. The pond could be sized to meet this minimum size requirement if the annual nutrient load at the site is known (Schueler, 1987). If unknown, the nutrient loads can be estimated using the methodology of Chapter 8.
4. *Longitudinal Slope.* Both wetland ponds and channels require a near-zero longitudinal slope (Urbonas, 1992).
5. *Base flow.* Enough inflow must be present in the wetland to maintain wetland soil and vegetation conditions. A water balance should be calculated. Dependence on groundwater for a moisture supply is not recommended.

$$S = Qi + R + Inf - Qo - ET$$

Where:
S = net change in storage
Qi = stormwater runoff inflow
R = contribution from rainfall
Inf = net infiltration (infiltration – exfiltration)
Qo = surface outflow
ET = evapotranspiration

6. *Seeding.* It is important that any seed which is used to establish vegetation germinate and take root before the site is inundated, or the seeds will be washed away. Live plants (plugs) should be considered for areas inundated even during construction.
7. *Length to Width Ratio.* The pond should gradually expand from the inlet and gradually contract toward the outlet. The length to width ratio of the wetland should be 2:1 to 4:1, with a length to width ratio of 3:1 recommended (Urbonas, 1992)
8. *Emptying Time.* The water quality volume above the permanent pool should empty in approximately 24 hours (Urbonas, 1992). This emptying time is not for the wetland itself, but for the additional storage above the wetland. Failure to approach this criteria is often the source of failure for constructed wetlands planned for the base of a water quantity storage facility.
9. *Inlet and Outlet Protection.* Inlet and outlet protection should be provided to reduce erosion of the basin. Velocity should be reduced at the entrance to reduce resuspension of sediment by using a forebay. The forebay should be approximately 5 to 10 percent of the water quality capture volume. The outlet should be placed in an offbay at least 3 ft deep. It may be necessary to protect the outlet with a skimmer shield that starts approximately one-half of the depth below the permanent water surface and extends above the maximum capture volume depth. A skimmer can be constructed from a stiff steel screen material that has smaller openings than the outlet orifice or perforations.
10. *Infiltration Avoidance.* Loss of water through infiltration should be avoided. This can be done by compacting the soil, incorporating clay into the soil, or lining the pond with artificial lining.
11. *Side Slopes.* Side slopes should be gradual to reduce erosion and enable easy maintenance. Side slopes should not be steeper than 4:1, and 5:1 is preferable (Urbonas, 1992).
12. *Open Water.* At least 25 percent of the basin should be an open water area at least 2 ft deep if the device is exclusively designed as a shallow marsh. The open water area will make the marsh area more aesthetically pleasing, and the combined water/wetland area will create a good habitat for waterfowl (Schueler, 1987). The combination of forebay, outlet and free water surface should be 30 to 50 percent, and this area should be between 2 and 4 ft deep. The wetland zone should be 50 to 70 percent of the area, and should be 6 to 12 inches deep (Urbonas, 1992).
13. *Freeboard.* The wetland pond should be designed with at least 1 ft of freeboard (Camp, Dresser and McKee, 1993).
14. *Use with Wet Pond.* Shallow marshes can be established at the perimeter of a wet pond by grading to form a 10 to 20 ft wide shallow bench. Aquatic emergent vegetation can be established in this area. A shallow marsh area can also be used near the inflow channel for sediment deposition (Schueler, 1987).
15. *Shape.* The shape is an important aspect of the wetland. It is recommended that a littoral shelf with gently sloping sides of 6:1 or milder to a point 24 to 28 inches below the water

surface (Mitsch and Gosselink, 1993). Bottom slopes of less than one percent slope are also recommended.

16. *Soils.* Clay soils underlying the wetland will help prevent percolation of water to groundwater. However, clay soils will also prevent root penetration, inhibiting growth. Loam and sandy soils may then be preferable. A good design may be use of local soils at the upper layer with clay beneath to prevent infiltration (Mitsch and Gosselink, 1993).
17. *Vegetation.* Vegetation must be established in the wetland to aid in slowing down velocities, and nutrient uptake in the wetland. A dependable way of establishing vegetation in the wetland is to transplant live plants or dormant rhizomes from a nursery. Emergent plants may eventually migrate into the wetland from upstream, but this is not a reliable source of vegetation. Transplanting vegetation from existing wetland areas is not encouraged, as it may damage the existing wetland area. Seeding is more cost effective, but is also not reliable. Vegetation should be selected by a qualified wetland scientist.
18. *Forebay.* A forebay may be provided to partially protect proposed wetland plantings from sediment loadings. If a forebay is provided, the forebay volume should be about 5 to 10 percent of the water quality volume.

REFERENCES

1. L. N. Boutiette and C. L. Duerring, 1994. *Massachusetts Nonpoint Source Management Manual, The Megamanual: A Guidance Document for Municipal Officials*, Massachusetts Department of Environmental Protection, Office of Watershed Management, Nonpoint Source Program, Boston, MA.
2. Camp, Dresser and McKee, Inc., Larry Walker Associates, 1993. *California Best Management Practices - Municipal*, California State Water Resources Council Board, Alameda, CA.
3. The Center for Watershed Protection, 1994. *Watershed Protection Techniques*, Vol. 1 No. 2, The Center for Watershed Protection, Silver Spring, MD.
4. M. E. Dormann, J. Hartigan, and B. Maestri, 1988. Retention, Detention, and Overland Flow for Pollutant Removal from Highway Stormwater Runoff: Interim Guidelines for Management Measures, FHWA/RD-87/056, Federal Highway Administration, Versar, Inc., Springfield, VA.
5. GKY and Associates, Inc. June 1996. Evaluation and Management of Highway Runoff Water Quality, Publication No. FHWA-PD-96-032. Prepared for: US Department of Transportation, Federal Highway Administration. Washington, DC.
6. W. J. Mitsch and J. G. Gosselink, 1993. *Wetlands*, Van Nostrand Reinhold, New York, NY.
7. T. R. Schueler, 1987. *Controlling Urban Runoff: A Practical Manual for Planning and Designing Urban BMPs*, Department of Environmental Programs, Metropolitan Washington Council of Governments, Washington, DC.
8. B. R. Urbonas, J. T. Doerfer, J. Sorenson, J. T. Wulliman, and T. Fairley, 1992. Urban Storm Drainage Criteria Manual, Volume 3 - Best Management Practices, Stormwater Quality, Urban Drainage and Flood Control District, Denver, CO.
9. Ventura Countywide Stormwater Quality Management Program, *Draft BMP CW: Constructed Wetlands*, June 1999. Ventura, CA.
10. *Manual for the Standard Urban Stormwater Mitigation Plan (SUSMP)*, Los Angeles County Department of Public Works, September 2002.

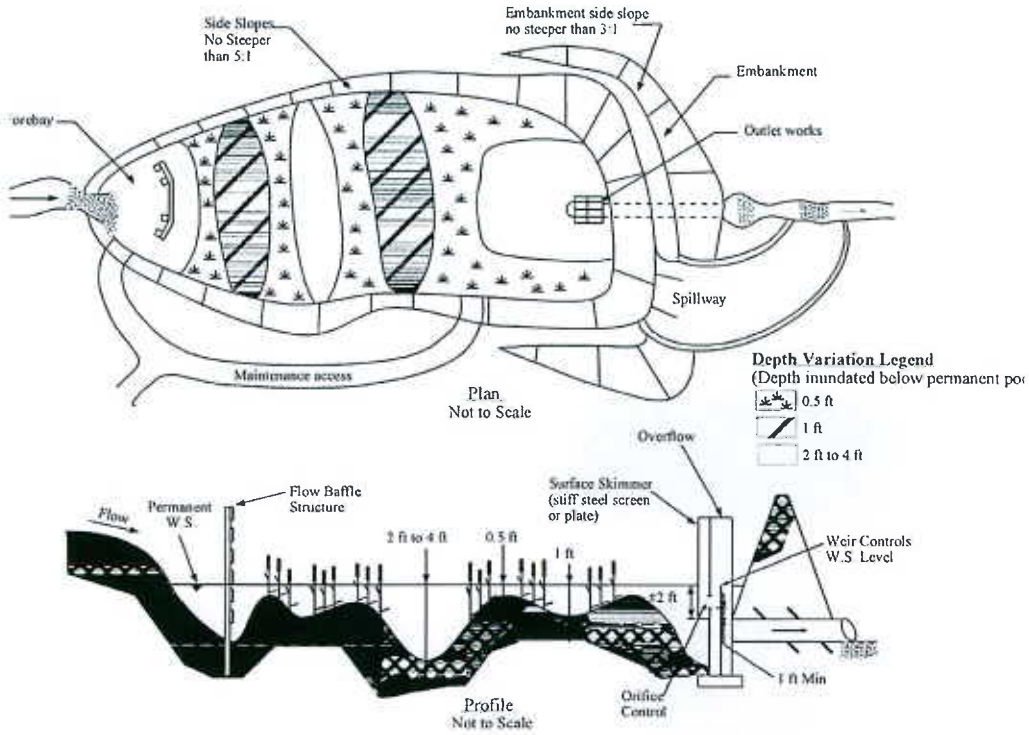

Figure PC-104A
Typical Constructed Wetland Components (SUSMP, 2002)

BMP PC – 105
EXTENDED/DRY DETENTION BASINS OR UNDERGROUND DETENTION TANKS

DESCRIPTION

Extended/dry detention basins are depressed basins that temporarily store a portion of stormwater runoff following a storm event. Underground detention tanks function similar to detention basins. However, since underground detention tanks are located below ground, the surface above these systems can be utilized for other more useful needs (parking lots, sidewalks, landscaping adjacent to buildings, etc). Water is controlled by means of a hydraulic control structure (orifice and/or weirs) to restrict outlet discharge. The extended/dry detention basins and underground detention tanks normally do not have a permanent water pool between storm events. The objectives of both systems are to remove particulate pollutants and to reduce maximum runoff values associated with development to their pre-development levels. Detention basin facilities may be berm-encased areas or excavated basins. Detention tank facilities may be corrugated metal pipe, concrete pipe, or vaults.

ADVANTAGES

1. Modest removal efficiencies for the larger particulate fraction of pollutants.
2. Removal of sediment and buoyant materials. Nutrients, heavy metals, toxic materials, and oxygen-demanding particles are also removed with sediment substances associated with the particles.
3. Can be designed for combined flood control and stormwater quality control.
4. May requires less capital cost and land area when compared to wet pond BMP.
5. Downstream channel protection when properly designed and maintained.

LIMITATIONS

1. Require sufficient area and hydraulic head to function properly.
2. Generally not effective in removing dissolved and finer particulate size pollutants from stormwater.
3. Some constraints other than the existing topography include, but are not limited to, the location of existing and proposed utilities, depth to bedrock, location and number of existing trees, and wetlands.
4. Extended/dry detention basins have moderate to high maintenance requirements.
5. Sediments can be resuspended if allowed to accumulate over time and escape through the hydraulic control to downstream channels and streams.
6. Some environmental concerns with using extended/dry detention basins, include potential impact on wetlands, wildlife habitat, aquatic biota, and downstream water quality.
7. May create mosquito breeding conditions and other nuisances.

DESIGN CRITERIA

EXTENDED/DRY DETENTION BASINS:

Criteria	Consideration
Storage volume	Calculate the volume of stormwater to be mitigated by the extended/dry detention basin using the method in Chapter 9. Provide a storage volume for 120 percent of the water quality volume. The additional 20 percent of storage volume provides for sediment accumulation and the resultant loss in storage volume.
Emptying time	A 24- to 48-hour emptying time should be used for the runoff volume generated from water quality volume, with no more than 50 percent of the water quality volume being released in 12 hours.
Basin geometry	Shape the pond with a gradual expansion from the inlet and a gradual contraction toward the outlet, thereby limiting short circuiting. The basin length to width ratio should be not less than 4
Two-stage design	A two-stage design with a lower frequency pool that fills often with frequently occurring runoff minimizes standing water and sediment deposition in the remainder of the basin can enhance water quality benefits. The bottom stage should store 10 to 25 percent of the water quality volume.
Low-flow channel	Conveys low base flows from the forebay to the outlet. Erosion protection should be provided for the low-flow channel.
Basin side slopes	Slopes should be stable and gentle enough to limit rill erosion and facilitate maintenance access and needs. Side slopes should be no steeper than 4:1 (H:V), preferably flatter.
Inlet	Dissipate flow energy at basin's inflow point(s) to limit erosion and promote particle sedimentation.
Forebay design	Provide the opportunity for larger particles to settle out in an area that has, as a useful refinement, a solid surface bottom to facilitate mechanical sediment removal. The forebay volume should be 5 to 10 percent of the water quality volume.
Outlet design	Use a water quality outlet that is capable of slowly releasing the water quality over a 24- to 48-hour period. A perforated riser can be used in conjunction with orifices and a weir box opening above it to control larger storm outflows. An anti-seep collar should be considered for the outlet pipe to control seepage.
Perforation protection	Provide a crushed rock blanket of sufficient size to prevent clogging of the primary water quality outlet while not interfering significantly with its hydraulic capacity.

Dam embankment	The embankment should be designed not to fail during a 100-yr and larger storm. Embankment slopes should be no steeper than 3:1 (H:V), preferably 4:1, and flatter, and planted with turf-forming grasses. Poorly compacted native soils should be excavated and replaced. Embankment soils should be compacted to at least 95 percent of their maximum density.
Vegetation	Bottom vegetation provides erosion control and sediment entrapment. Basin bottom, berms, and side-sloping areas may be planted with native grasses or with irrigated turf, depending on the local setting.
Maintenance access	Access to the forebay and outlet area shall be provided to maintenance vehicles. Maximum grades should be eight percent, and a solid driving surface of gravel, rock, concrete, gravel-stabilized turf, or other approved surface should be provided.

UNDERGROUND DETENTION TANKS:

Criteria	Consideration
Storage volume	Calculate the volume of stormwater to be mitigated by the extended/dry detention basin using the method in Chapter 9. Provide a storage volume for 120 percent of the water quality volume. The additional 20 percent of storage volume provides for sediment accumulation and the resultant loss in storage volume.
Emptying time	A 24- to 48-hour emptying time should be used for the runoff volume generated from water quality volume, with no more than 50 percent of the water quality volume being released in 12 hours.
Tank geometry	Tank should be constructed to fit within the site layout.
Low-flow outlet	Conveys low base flows from the tank to the outlet.
Outlet design	Use a water quality outlet that is capable of slowly releasing the runoff volume generated from 0.75-inches of rainfall over a 24- to 48-hour period.
Overflow design	Runoff volume generated from a storm greater than the water quality event (See Chapter 9) should be diverted via a flow splitter placed at the tank entrance or an overflow weir/orifice system designed in conjunction with the outlet of the tank.
Maintenance access	Access to the tanks shall be provided for maintenance personal.

REFERENCES

1. Camp, Dresser and McKee, Inc., Larry Walker Associates, 1993. *California Best Management Practices - Municipal*, California State Water Resources Council Board, Alameda, CA.

2. GKY and Associates, Inc. June 1996. *Evaluation and Management of Highway Runoff Water Quality*, Publication No. FHWA-PD-96-032. Prepared for: US Department of Transportation, Federal Highway Administration. Washington, DC.
3. K. H. Lichten, June 1997. *Compilation of New Development Stormwater Treatment Controls in the San Francisco Bay Area*, Bay Area Stormwater Management Agencies Association, San Francisco, CA.
4. *Low-Impact Development Design Manual*, November 1997. Department of Environmental Resources, Prince George's County, MD.
5. T. R. Schueler, 1987. *Controlling Urban Runoff: A Practical Manual for Planning and Designing Urban BMPs*, Department of Environmental Programs, Metropolitan Washington Council of Governments, Washington, DC.
6. Ventura Countywide Stormwater Quality Management Program, *Draft BMP DD: Extended Dry Detention Basins*, June 1999. Ventura, CA.
7. G. K. Young and F. Graziano, 1989. *Outlet Hydraulics of Extended Detention Facilities*, Northern Virginia Planning District Commission, Annandale, VA.
8. *Manual for the Standard Urban Stormwater Mitigation Plan (SUSMP)*, Los Angeles County Department of Public Works, September 2002.

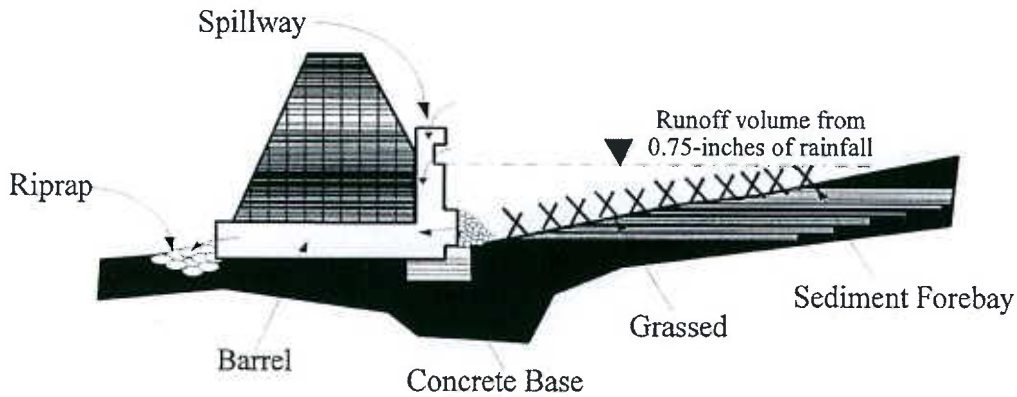

Figure PC-105A
Typical Extended Dry Detention Components (SUSMP, 2002)

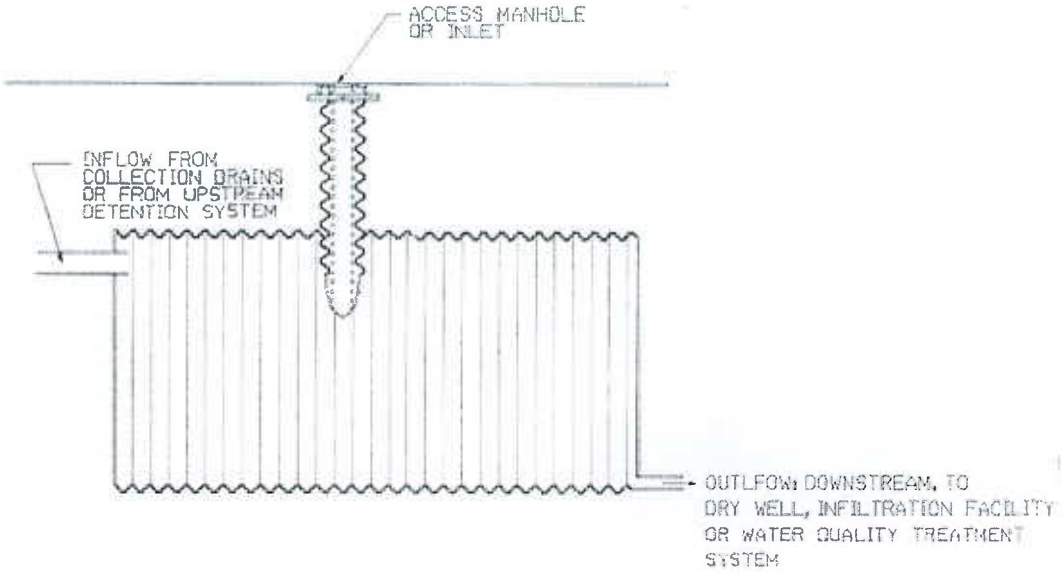

Figure PC-105B
Typical Underground Detention Components (SUSMP, 2002)

BMP PC – 106
INFILTRATION BASINS

DESCRIPTION

An infiltration basin is a surface pond which captures first-flush stormwater and treats it by allowing it to percolate into the ground and through permeable soils. As the stormwater percolates into the ground, physical, chemical, and biological processes occur which remove both sediments and soluble pollutants. Pollutants are trapped in the upper layers of the soil, and the water is then released to groundwater. Infiltration basins are generally used for drainage areas between 5 and 50 acres (Boutiette and Duerring, 1994). For drainage areas less than 5 acres, an infiltration trench or other BMP may be more appropriate. For drainage areas greater than 50 acres, maintenance of an infiltration basin would be burdensome, and an extended/dry detention basin or wet pond may be more appropriate. Infiltration basins are generally dry except immediately following storms, but a low-flow channel may be necessary if a constant base flow is present.

Infiltration basins create visible surface ponds that dissipate because water is infiltrated through the pond bottom; infiltration trenches hide surface drainage in underground void regions and the water is infiltrated below the rocks. Infiltration basins effectively remove soluble pollutants because processes such as adsorption and biological processes remove these soluble pollutants from stormwater. This kind of treatment is not always available in other kinds of BMPs.

Several types of infiltration basins exist. They can be either in-line or off-line, and may treat different volumes of water, such as the water quality volume or the 2-year or 10-year storm. A full infiltration basin is built to hold the entire water quality volume, and the only outlet from the pond is an emergency spillway. More commonly used is the combined infiltration/detention basin, where the outflow is controlled by a vertical riser. Excess flow volume spills over the drop inlet at the top of the riser, and very large storms will exit through the emergency spillway. Other types of basins include the side-by-side basin, and the off-line infiltration basin. The side by side basin consists of a basin with an elevated channel to carry base flows running along one of its sides. Storm flows also flow through the elevated channel, but overflow the channel and enter the basin when they become deep enough. An off-line infiltration basin is used to treat the first flush runoff, while higher flows remain in the main channel.

ADVANTAGES

1. High removal capability for particulate pollutants and moderate removal for soluble pollutants.
2. Groundwater recharge helps to maintain dry-weather flows in streams.
3. Can minimize increases in runoff volume.
4. When properly designed and maintained, it can replicate pre-development hydrology more closely than other BMP options.
5. Basins provide more habitat value than other infiltration systems.

LIMITATIONS

1. High failure rate due to clogging and high maintenance burden.
2. Low removal of dissolved pollutants in very coarse soils.
3. Not suitable on fill slopes or steep slopes.
4. Risk of groundwater contamination in very coarse soils, may require groundwater monitoring.
5. Should not be used if significant upstream sediment load exists.
6. Slope of contributing watershed needs to be less than 20 percent.
7. Not recommended for discharge to a sole source aquifer.
8. Cannot be located within 100 feet of drinking water wells.
9. Metal and petroleum hydrocarbons could accumulate in soils to potentially toxic levels.
10. Relatively large land requirement.
11. Only feasible where soil is permeable and there is sufficient depth to bedrock and water table.
12. Need to be located a minimum of 10 feet down gradient and 100 feet up gradient from building foundations because of seepage problems.
13. Infiltration facilities could fall under additional regulations of IDEM or IDNR regarding waste disposal to groundwater.

DESIGN CRITERIA

Designing an infiltration basin is a process in which several factors are examined. The soil type and the drainage area are important factors in infiltration basin design. If either one of these two is inappropriate, the infiltration basin will not function properly. The steps in the design of an infiltration basin are listed below.

1. *Drainage Area.* Drainage areas between 5 and 50 acres are good candidates for infiltration basins. Infiltration trenches might be more appropriate for smaller drainage areas, while retention ponds are more appropriate for larger drainage areas (Schueler, 1987).
2. *Soils.* The site must have the appropriate soil, or the basin will not function properly. It is important that the soil be able to accept water at a minimum infiltration rate. Soils with an infiltration rate of less than 0.3 inches per hour, are not suitable sites for infiltration basins. Soils with a high percentage of clay are also undesirable, and should not be used if the percentage of clay is greater than 30. Generally, areas with fine to moderately fine soils are prevalent should not be considered as sites, because these soils do not have a high infiltration rate. Soils with greater than 40 percent combined silt/clay also should not be used. A series of soil cores should be taken to a depth of at least 5 feet below the proposed basin floor elevation to determine which kinds of soils are prevalent at the potential site.
3. *Volume.* Calculate the volume of stormwater to be mitigated by the infiltration basin using the Methods of Chapter 9.
4. *Slope.* The basin floor should be as flat as possible to ensure an even infiltration surface and should not be or greater than 5 percent slope. Also, side slopes should have a maximum slope of 3 horizontal to 1 vertical (Schueler, 1987).
5. *Vegetation.* Vegetation should be established as soon as possible. Water-tolerant reed canary grass or tall fescue should be planted on the floor and side slopes of the basin (Schueler, 1987). Root penetration and thatch formation maintains and sometimes

improves infiltration capacity of the basin floor. Also, the vegetation helps to trap the pollutants by growing through the accumulated sediment and preventing resuspension. The vegetation also helps reduce pollution levels by taking up soluble nutrients for growth and converting them into less available pollutant forms.

6. *Inlet.* Sediment forebays or riprap aprons should be installed to reduce flow velocities and trap sediments upon entrance to the basin. Flow should be evenly distributed over the basin floor by a riprap apron. The inlet pile or channel should enter the basin at floor level to prevent erosion (Schueler, 1987).
7. *Drainage Time.* The basin should completely drain within 24 hours to avoid the risk of it not being empty before the next storm. Overestimation of the future infiltration capacity can result in a standing water problem. Ponds with detention times of less than six hours are not effectively removing pollutants from the storm flows (Schueler, 1987). The most common problem is setting the elevation and size of the low-flow orifice. If the orifice is too large, runoff events pass through the basin too quickly. If the low-flow orifice diameter is too narrow, there is a risk of creating an undesirable quasi-permanent pool.
8. *Buffer Zone.* A 25 foot buffer should be placed between the edge of the basin floor, and the nearest adjacent lot (Schueler, 1987). The buffer should consist of water tolerant, native plant species that provide food and cover for wildlife. This buffer zone may also act as a screen if necessary.
9. *Access.* Access to the basin floor should be provided for light equipment (Schueler, 1987).
10. *Water Table.* The basin floor should be a minimum of 10 feet above the water table.
11. *Maximum Depth.* The maximum allowable depth is equal to the infiltration rate multiplied by the maximum allowable dewatering time (24 hours).
12. *Freeboard.* A minimum of 2 feet of freeboard should be available between the spillway crest and the top of the dam (Dormann, et al., 1988).
13. *Emergency Spillway.* The emergency spillway should be able to safely pass the 100-year flood.
14. *Surface Area of the Basin Floor.* If the surface area of the basin floor is increased, the infiltration rate and quantity of runoff which can be infiltrated will be increased. Larger surface areas can also help compensate for clogging on the surface.

REFERENCES

1. L. N. Boutiette and C. L. Duerring, 1994. *Massachusetts Nonpoint Source Management Manual, The Megamanual: A Guidance Document for Municipal Officials*, Massachusetts Department of Environmental Protection, Office of Watershed Management, Nonpoint Source Program, Boston, MA.
2. Camp, Dresser and McKee, Inc., Larry Walker Associates, 1993. *California Best Management Practices - Municipal*, California State Water Resources Council Board, Alameda, CA.
3. M. E. Dormann, J. Hartigan, and B. Maestri, 1988. *Retention, Detention, and Overland Flow for Pollutant Removal from Highway Stormwater Runoff: Interim Guidelines for Management Measures*, FHWA/RD-87/056, Federal Highway Administration, Versar, Inc., Springfield, VA.
4. GKY and Associates, Inc. June 1996. *Evaluation and Management of Highway Runoff Water Quality*, Publication No. FHWA-PD-96-032. Prepared for: US Department of Transportation, Federal Highway Administration. Washington, DC.

5. T. R. Schueler, 1987. *Controlling Urban Runoff: A Practical Manual for Planning and Designing Urban BMPs*, Department of Environmental Programs, Metropolitan Washington Council of Governments, Washington, DC.
6. Ventura Countywide Stormwater Quality Management Program, *Draft BMP IN: Infiltration Facilities*, June 1999. Ventura, CA.
7. *Manual for the Standard Urban Stormwater Mitigation Plan (SUSMP)*, Los Angeles County Department of Public Works, September 2002.

BMP PC – 107
INFILTRATION TRENCHES

DESCRIPTION

An infiltration trench is basically an excavated trench that has been lined with filter fabric and backfilled with stone to form an underground basin. Runoff is diverted into the trench and either infiltrates into the soil, or enters a perforated pipe underdrain and is routed to an outflow facility. The depths of an infiltration trench generally range between 3 and 8 feet (Schueler, 1987) and may change when site-specific factors are considered. Smaller trenches are used for water quality, while larger trenches can be constructed if stormwater quantity control is required (Schueler, 1987). Trenches are not usually feasible in ultra-urban or retrofit situations where the soils have low permeability or low voids (Schueler, 1992). They should be installed only after the contributing area has stabilized to minimize runoff of sediments.

Infiltration trenches and infiltration basins follow similar design logic. The differences are that the former is for small drainage areas and stores runoff out of sight, within a gravel or aggregate matrix, whereas the latter is for larger drainage areas and water is stored in a visible surface pond.

Infiltration trenches effectively remove soluble and particulate pollutants. They can provide groundwater recharge by diverting 60 to 90 percent of annual urban runoff back into the soil (Boutiette and Duerring, 1994). They are generally used for drainage areas less than 10 acres, but some references cite 5 acres as a maximum size drainage area (Schueler, 1987, 1992). Potential locations include residential lots, commercial areas, parking lots, and adjacent to road shoulders. Trenches are only feasible on permeable soils (sand and gravel), and where the water table and bedrock are situated well below the bottom of the trench (Boutiette and Duerring, 1994; Schueler, 1987). Trenches are frequently used in combination with grassed sales. Trenches should not be used to trap course sediments, because the large sediment will clog the trench. Grass buffers can be installed to capture sediment before it enters the trench.

ADVANTAGES

1. Provides groundwater recharge.
2. Trenches fit into small areas.
3. Good pollutant removal capabilities.
4. Can minimize increases in runoff volume.
5. Can fit into medians, perimeters, and other unused areas of a development site.
6. Helps replicate pre-development hydrology and increases dry weather base flow.

LIMITATIONS

1. Slope of contributing watershed needs to be less than 20 percent.
2. Soil should have infiltration rate greater than 0.3 inches per hour and clay content less than 30 percent.
3. Drainage area should be between 1 to 10 acres.
4. The bottom of infiltration trench should be at least 4 feet above the underlying

bedrock and the seasonal high water table.

5. High failure rates of conventional trenches and high maintenance burden.
6. Low removal of dissolved pollutants in very coarse soils.
7. Not suitable on fill slopes or steep slopes.
8. Risk of groundwater contamination in very coarse soils, may require groundwater monitoring.
9. Infiltration facilities could fall under additional regulations of IDEM or IDNR regarding waste disposal to groundwater.
10. Cannot be located within 100 feet of drinking water wells.
11. Need to be located a minimum of 10 feet down gradient and 100 feet up gradient from building foundations because of seepage problems.
12. Should not be used if upstream sediment load cannot be controlled prior to entry into the trench.
13. Metals and petroleum hydrocarbons could accumulate in soils to potentially toxic levels.

DESIGN CRITERIA

Infiltration trenches can be categorized both by trench type, and as surface or below ground. Special inlets are required for underground trenches to prevent sediment and oil or grease from clogging the infiltration trench (Schueler, 1987). Surface trenches are commonly used where land is not limiting and underground trenches are better suited for development with minimal land availabilities.

1. *Volume.* Calculate the volume of stormwater to be mitigated by the water quality volume calculation of Chapter 9.
2. *Dimensions.* Generally, soils with low infiltration rates require a higher ratio of bottom surface area to storage volume (Northern Virginia Planning District Commission and Engineers and Surveyors Institute, 1992). The following formulas can be used to determine the dimensions of the infiltration basin:

$$H_{Tmax}=E*t_{max}/P$$

$$H_{Tmin}=E*t_{min}/P$$

$$A=V/[E*t_{max}]$$

Where:

H_{Tmax}, H_{Tmin} = Maximum and minimum trench depths (ft)

E = Infiltration rate in length per unit time (ft/hr).
t_{max}, t_{min} = Maximum and minimum target drain-time (hr)
P= Pore volume ratio of stone aggregate (% porosity/100).
V= Fluid storage volume requirement (ft^3)
A= Trench bottom surface area (ft^2).

The actual storage volume of the facility is the void ratio multiplied by the total volume of the trench. The available land and other constraints such as depth to bedrock or water table are used to determine the final dimensions of the trench.

3. *Buffer Strip/Special Inlet.* A grass filter strip a minimum of 20 feet should surround the trench on all sides over which surface flow reaches an above-ground trench. A special inlet can be used to prevent floatable material, solids, grease, and oil from entering trenches which are located below ground.
4. *Filter Fabric.* The bottom and sides of the trench should be lined with filter fabric soon after the trench is excavated. The fabric should be flush with the sides, overlap on the order of 2 feet over the seams, and not have trapped air pockets. As an alternative, 6 inches of clean, washed sand may be placed on the bottom of the trench instead of filter fabric.
5. *Grass Cover.* If the trench is grass covered, at least 1 foot of soil should be over the trench for grass substrate.
6. *Surface Area.* The surface area of the trench can be engineered to the site with the understanding that a larger surface area of the bottom of the trench increases infiltration rates and helps to reduce clogging and that depth may be limited by seasonal groundwater.
7. *Surface Area of the Trench Bottom.* Pollutant removal in a trench can be improved by increasing the surface area of the trench bottom. This is done by adjusting the geometry to make the trench shallow and broad, rather than deep and narrow. Greater bottom surface area increases infiltration rates and provides more area and depth for soil filtering. In addition, broader trench bottoms reduce the risk of clogging at the soil/filter cloth interface by spreading infiltration over a wider area.
8. *Distance from Wells and Foundations.* The trench should be at least 100 feet of any drinking water supply well, and at least 10 feet down gradient and 100 feet up gradient from building foundations (Schueler, 1987).
9. *Drain Time.* The drain time should be between two and three days. The total volume of the trench should drain in 48 hours. The minimum drain time should be 24 hours.
10. *Backfill Material.* The backfill material in the trench should have a D_{50} sized between 1.5 and 3 inches and clay content should be limited to less than 30 percent. The porosity of the material should be between 0.3 and 0.4.
11. *Observation Well.* An observation well of 4 to 6 inches diameter PVC should be located in the center of the trench and the bottom should rest on a plate. The top should be capped. The water level should be measured after a storm event. If it has not completely drained in three days, some remedial work may need to be done.
12. *Overflow Berm.* A 2 to 3 inch emergency overflow berm on the downstream side of the trench serves a twofold purpose. First, it detains surface runoff and allows it to pond and infiltrate to the trench. The berm also promotes uniform sheet flow for runoff overflow.

REFERENCES

1. L. N. Boutiette and C. L. Duerring, 1994. *Massachusetts Nonpoint Source Management Manual, The Megamanual: A Guidance Document for Municipal Officials*, Massachusetts Department of Environmental Protection, Office of Watershed Management, Nonpoint Source Program, Boston, MA.
2. Camp, Dresser and McKee, Inc., Larry Walker Associates, 1993. *California Best Management Practices - Municipal*, California State Water Resources Council Board, Alameda, CA.
3. DEQ Storm Water Management Guidelines, Department of Environmental Quality, State of Oregon. http://waterquality.deq.state.or.us/wq/groundwa/swmgmtguide.htm
4. M. E. Dormann, J. Hartigan, and B. Maestri, 1988. *Retention, Detention, and Overland Flow for Pollutant Removal from Highway Stormwater Runoff: Interim Guidelines for Management Measures*, FHWA/RD-87/056, Federal Highway Administration, Versar, Inc., Springfield, VA.
5. GKY and Associates, Inc. June 1996. *Evaluation and Management of Highway Runoff Water Quality*, Publication No. FHWA-PD-96-032. Prepared for: US Department of Transportation, Federal Highway Administration. Washington, DC.
6. *Low-Impact Development Design Manual*, November 1997. Department of Environmental Resources, Prince George's County, MD.
7. Northern Virginia Planning District Commission and Engineers Surveyors Institute, 1992. *Northern Virginia BMP Handbook, A Guide to Planning and Designing Best Management Practices in Northern Virginia*, Annandale, VA.
8. T. R. Schueler, 1987. *Controlling Urban Runoff: A Practical Manual for Planning and Designing Urban BMPs*, Department of Environmental Programs, Metropolitan Washington Council of Governments, Washington, DC.
9. T. R. Schueler, P. Kumble, and M. Heraty, 1992. *A Current Assessment of Urban Best Management Practices: Techniques for Reducing Nonpoint Source Pollution in the Coastal Zone*, Anacostia Research Team, Metropolitan Washington Council of Governments, Washington, DC.
10. Ventura Countywide Stormwater Quality Management Program, *Draft BMP IN: Infiltration Facilities*, June 1999. Ventura, CA.
11. *Manual for the Standard Urban Stormwater Mitigation Plan (SUSMP)*, Los Angeles County Department of Public Works, September 2002.

BMP PC – 108
MEDIA FILTRATION

DESCRIPTION OF SAND FILTERS

Media filters are two-stage constructed treatment systems, including a pretreatment settling basin and a filter bed containing sand or other filter media. Various types of sand filter designs have been developed and implemented successfully in space-limited areas. The filters are not designed to treat the entire storm volume but rather the water quality volume (Chapter 9), that tends to contain higher pollutant levels. Sand filters can be designed so that they receive flow directly from the surface (via inlets or even as sheet flow directly onto the filter bed) or via storm drain pipes. They can be exposed to the surface or completely contained in underground pipe systems or vaults.

While there are various designs, most intermittent sand filters contain four basic components, as shown schematically in Figure 10-5 and discussed below:

1. *Diversion Structure.* Either incorporated into the filter itself or as a stand alone device, the diversion structure isolates the WQV and routes it to the filter. Larger volumes are bypassed directly to the storm drain system.
2. *Sedimentation Chamber.* Important to the long-term successful operation of any filtration system is the removal of large grained sediments prior to exposure to the filter media. The sedimentation chamber is typically integrated directly into the sand filter BMP but can also be a stand alone unit if space permits.
3. *Filter Media.* Typically consists of a 1-inch gravel layer over an 18 to 24 inch layer of washed sand. A layer of geotextile fabric can be placed between the gravel and sand layers.
4. *Underdrain System.* Below the filter media is a gravel bed, separated from the sand by a layer of geotextile fabric, in which is placed a series of perforated pipes. The treated runoff is routed out of the BMP to the storm sewer system or another BMP.

ADVANTAGES

1. May require less space than other treatment control BMPs and can be located underground.
2. Does not require continuous base flow.
3. Suitable for individual developments and small tributary areas up to 100 acres.
4. Does not require vegetation.
5. Useful in watersheds where concerns over groundwater quality or site conditions prevent use of infiltration.
6. High pollutant removal capability.
7. Can be used in highly urbanized settings.
8. Can be designed for a variety of soils.
9. Ideal for aquifer regions.

LIMITATIONS

1. Given that the amount of available space can be a limitation that warrants the consideration of a sand filter BMP, designing one for a large drainage area where there is room for more conventional structures may not be practical.

2. Available hydraulic head to meet design criteria.
3. Requires frequent maintenance to prevent clogging.
4. Not effective at removing liquid and dissolved pollutants.
5. Severe clogging potential if exposed soil surfaces exist upstream.
6. Sand filters may need to be placed offline to protect it during extreme storm events.

DESIGN CRITERIA

1. *Treatment Rate.* Calculate the flow rate of stormwater to be mitigated by the media filtration according to the method in Chapter 9.

2. *Surface area of the filter.* The following equation is for a maximum filtration time of 24 hours:

A. Surface Systems or Vaults

Filter area (ft2) = 3630SuAH/K(D+H)

Where: Su = unit storage (inches-acre)
A = area in acres draining to facility
H = depth (ft) of the sand filter
D = average water depth (ft) over the filter taken to be one-half the difference between the top of the filter and the maximum water surface elevation
K = filter coefficient recommended as 3.5

This equation is appropriate for filter media sized at a diameter of 0.02 to 0.04 inches. The filter area must be increased if a smaller media is used.

B. Underground Sandfilter Systems

a. Compute the required size of the sand filter bed surface area, AF. The following equation is based on Darcy's law and is used to size the sand filter bed area:

AF (ft2) = 24(WQV)(df)/ [k (hf + df) tf]

Where: Af = sand filter bed surface area (ft2)
WQV = Water quality treatment volume (ft3)
df = sand filter bed depth (ft)
k = filter coefficient recommended as 3.5 (ft/day)
hf = average height of water above the sand bed (ft)= hmax/2
hmax = elevation difference between the invert of the inlet pipe and the top of the sand filter bed (ft)
tf = time required for the runoff to filter through the sand bed (hr). (Typically 24 hr).

Note: 24 in the equation is the 24hr/day constant.

b. Choose a pipe size (diameter). The selection of pipe size should be based on site parameters such as: elevation of the runoff coming into the sand filter system, elevation of downstream connection to which the sand filter system

outlet must tie into, and the minimum cover requirements for live loads. A minimum of 5' clearance should be provided between the top of the inner pipe wall and the top of the filter media for maintenance purpose. Use:

$D = d + 5$

Where:
D = pipe diameter (ft)
d = depth of sand filter and underdrain pipe media depth (ft)
= dg + df
dg = underdrain pipe media depth = 0.67'
df = sand filter bed deph (ft): 1.5 to 2.0 feet

c. Compute the sand filter width(based on the pipe geometry):

$$Wf = 2\,[R^2 - (R - d)^2\,]^{0.5}$$

Where:

Wf = filter width (ft)
R = pipe radius (ft) = D/2

d. Compute the filter length:
$Lf = Af / Wf$

Where:
Lf = filter length (ft)

3. *Configuration*

A. Surface sand filter

Criteria for the settling basin.
a. For the outlet use a perforated riser pipe.
b. Size the outlet orifice for a 24 hour drawdown
c. Energy dissipater at the inlet to the settling basin.
d. Trash rack at outlets to the filter.
e. Vegetate slopes to the extent possible.
f. Access ramp (4:1 or less) for maintenance vehicles.
g. One foot of freeboard.
h. Length to width ratio of at least 3:1 and preferably 5:1.
i. Sediment trap at inlet to reduce resuspension.

Criteria for the filter.
a. Use a flow spreader.
b. Use clean sand 0.02 to 0.04 inch diameter.
c. Some have placed geofabric on sand surface to facilitate maintenance.
d. Underdrains with:
- Schedule 40 PVC.
- 4 inch diameter.
- 3/8 inch perforations placed around the pipe, with 6 inch space between each perforation cluster.
- maximum 10 foot spacing between laterals.

- minimum grade of 1/8 inch per foot.

B. Underground sand filter

Criteria for the settling tank (if required).

a. Use orifice and/or weir structure for the outlet.

b. Size the outlet orifice or weir for a 24 hour drawdown time

c. Provide access manhole for maintenance.

Criteria for the filter.

a. Use a flow spreader.

b. Use clean sand 0.02 to 0.04 inch diameter.

c. Some have placed geofabric on sand surface to facilitate maintenance.

d. Underdrains with:

- Schedule 40 PVC.
- 4 inch diameter
- 3/8 inch perforations placed around the pipe, with 6 inch space between each perforation cluster.

e. Provide access manhole for maintenance.

REFERENCES

1. Camp, Dresser and McKee, Inc., Larry Walker Associates, 1993. *California Best Management Practices - Municipal*, California State Water Resources Council Board. Alameda, CA.

2. GKY and Associates, Inc. June 1996. *Evaluation and Management of Highway Runoff Water Quality*, Publication No. FHWA-PD-96-032. Prepared for: US Department of Transportation, Federal Highway Administration. Washington, DC.
3. B. R. Urbonas, January/February 1999. *Design of a Sand Filter for Stormwater Quality Enhancement*, Water Environment Research, Volume 71, Number 1. Denver, CO.
4. Ventura Countywide Stormwater Quality Management Program, *Draft BMP MF: Media Filters*, June 1999. Ventura, CA.
5. Northern Virginia BMP Handbook, City of Alexandria Virginia, February 1992. Alexandria, VI.
6. US EPA, Developments in Sand Filter Technology to Improve Runoff Quality, www.epa.gov/owowwtr1/NPS/wpt/wpt02/wpt02fa2.html.
7. *Manual for the Standard Urban Stormwater Mitigation Plan (SUSMP)*, Los Angeles County Department of Public Works, September 2002.

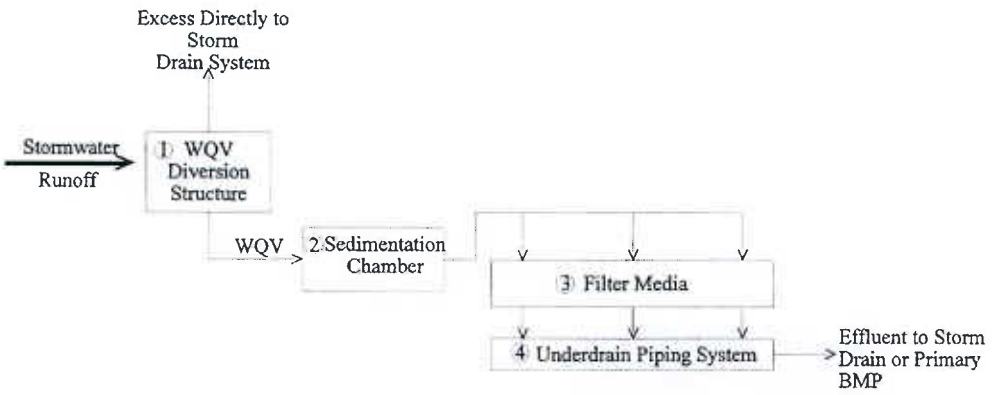

Figure PC-108A
Typical Media Filtration Schematic (SUSMP, 2002)

BMP PC – 109
STORM DRAIN INSERTS

DESCRIPTION

Storm drain inserts can be a variety of devices that are used in storm drain conveyance systems to reduce pollutant loadings in stormwater runoff. Most storm drain inserts reduce oil and grease, debris, and suspended solids through gravity, centrifugal force, or other methods. BMPs such as these can be particularly useful in areas susceptible to spills of petroleum products, such as gas stations. Figure 10-6 illustrates one of many different types of storm drain inserts. Trapped sediments and floatable oils must be pumped out regularly to maintain the effectiveness of the units.

ADVANTAGES

1. Prefabricated for different standard storm drain designs.
2. Require minimal space to install.

LIMITATIONS

1. Some devices may be vulnerable to accumulated sediments being resuspended during heavy storms.
2. Can only handle limited amounts of sediment and debris.
3. Maintenance and inspection of storm drain inserts are required before and after each rainfall event.
4. High maintenance costs.
5. Hydraulic losses.

DESIGN CRITERIA

1. Calculate the minimum flow rate to be mitigated by the storm drain insert using the methods of Chapter 9.
2. Select unit which meets 80% TSS removal for design flow rate.
3. Provide an overflow to bypass flows greater than the water quality treatment rate.

REFERENCES

1. Center for Watershed Protection, Environmental Quality Resources and Loiederman Associates. 1997. *Maryland Stormwater Design Manual*. Prepared for: Maryland Department of the Environment. Baltimore, MD.
2. DEQ Storm Water Management Guidelines, Department of Environmental Quality, State of Oregon. http://waterquality.deq.state.or.us/wq/groundwa/swmgmtguide.htm
3. K. H. Lichten, June 1997. *Compilation of New Development Stormwater Treatment Controls in the San Francisco Bay Area*, Bay Area Stormwater Management Agencies Association, San Francisco, CA.
4. *Manual for the Standard Urban Stormwater Mitigation Plan (SUSMP)*, Los Angeles County Department of Public Works, September 2002.

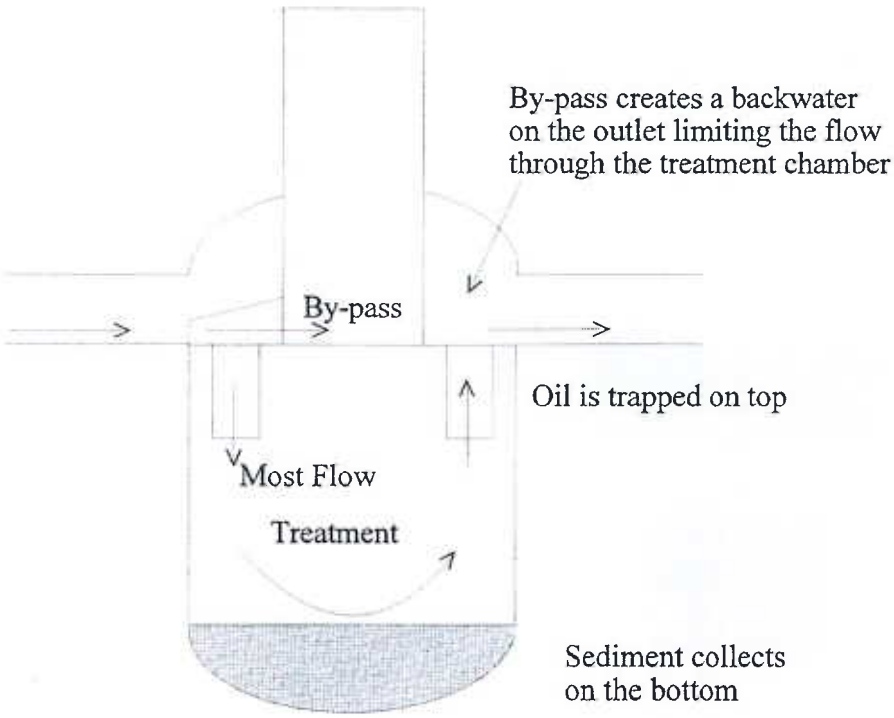

Figure PC-109A
Typical Storm Insert Schematic (SUSMP, 2002)

BMP PC – 110
VEGETATION FILTER STRIPS

DESCRIPTION

Vegetated filter strips, also known as vegetated buffer strips, are vegetated sections of land similar to grassed swales, except they are essentially flat with low slopes, and are designed only to accept runoff overland sheet flow (Schueler, 1992). They may appear in any vegetated form from grassland to forest, and are designed to intercept upstream flow, lower flow velocity, and spread water out as sheet flow (Schueler, 1992). The dense vegetative cover facilitates conventional pollutant removal through detention, filtration by vegetation, and infiltration into soil (Yu and Kaighn, 1992). Wooded and grass filter strips have slightly higher removal rates. Dissolved nutrient removal for either type of vegetative cover is usually poor, however wooded strips show slightly higher removal due to increased retention and sequestration by the plant community (Florida Department of Transportation, 1994).

Although an inexpensive control measure, they are most useful in contributing watershed areas where peak runoff velocities are low, as they are unable to treat the high flow velocities typically associated with high impervious cover (Barret, et al., 1993). Similar to grassed swales, filter strips can last for 10 to 20 years with proper conditions and regular maintenance. Life expectancy is significantly diminished if uniform sheet flow and dense vegetation are not maintained.

ADVANTAGES

1. Lowers runoff velocity (Schueler, 1987).
2. Slightly reduces runoff volume (Schueler, 1987).
3. Slightly reduces watershed imperviousness (Schueler, 1987).
4. Slightly contributes to groundwater recharge (Schueler, 1987).
5. Aesthetic benefit of vegetated "open spaces" (Colorado Department of Transportation, 1992).
6. Preserves the character of riparian zones, prevents erosion along streambanks, and provides excellent urban wildlife habitat (Schueler, 1992).

LIMITATIONS

1. Filter strips cannot treat high velocity flows, and do not provide enough storage or infiltration to effectively reduce peak discharges to predevelopment levels for design storms (Schueler, 1992). This lack of quantity control dictates use in rural or low density development.
2. Requires slope less than 5%.
3. Requires low to fair permeability of natural subsoil.
4. Large land requirement.
5. Often concentrates water, which significantly reduces effectiveness.
6. Pollutant removal is unreliable in urban settings.

DESIGN CRITERIA

1. Successful performance of filter strips relies heavily on maintaining shallow unconcentrated flow (Colorado Department of Transportation, 1992). To avoid flow channelization and maintain performance, a filter strip should:

    (1) Be equipped with a level spreading device for even distribution of runoff,
    (2) Contain dense vegetation with a mix of erosion resistant, soil binding species,

(3) Be graded to a uniform, even and relatively low slope,

(4) Laterally traverse the contributing runoff area (Schueler, 1987),

(5) The area to be used for the strip should be free of gullies or rills that can concentrate overland flow (Schueler, 1987),

(6) Filters strip should be placed 3 to 4 feet from edge of pavement to accommodate a vegetation free zone (Washington State Department of Transportation, 1995). The top edge of the filter strip along the pavement should be designed to avoid the situation where runoff would travel along the top of the filter strip, rather than through it. Dilhalla, et al., (1986) suggest that berms be placed at 50 to 100 feet intervals perpendicular to the top edge of the strip to prevent runoff from bypassing it (as cited in Washington State Department of Transportation, 1995),

(7) Top edge of the filter strip should follow the same elevation contour. If a section of the edge of the strip dips below the contour, runoff will tend to form a channel toward the low spot,

(8) Filter strips should be landscaped after other portions of the project are completed (Washington State Department of Transportation, 1995). However, level spreaders and strips used as sediment control measures during the construction phase can be converted to permanent controls if they can be regraded and reseeded to the top edge of the strip.

2. Filter strips can be used on an up gradient from watercourses, wetlands, or other water bodies, along toes and tops of slopes, and at outlets of other stormwater management structures (Boutiette and Duerring, 1994). They should be incorporated into street drainage and master drainage planning (Urbonas, 1992). The most important criteria for selection and use of this BMP are soils, space, and slope, where:

(1) *Soils and moisture are adequate to grow relatively dense vegetative stands.* Underlying soils should be of low permeability so that the majority of the applied water discharges as surface runoff. The range of desirable permeability is between 0.06 to 0.6 inches/hour (Horner, 1985). Common soil textural classes are clay, clay loam, and silty clay. The presence of clay and organic matter in soils improves the ability of filter strips to remove pollutants from the surface runoff (Schueler, 1992). Greater removal of soluble pollutants can be achieved where the water table is within 3 feet of the surface (i.e., within the root zone) (Schueler, 1992). Filter strips function most effectively where the climate permits year-round dense vegetation.

(2) *Sufficient space is available.* Because filter strip effectiveness depends on having an evenly distributed sheet flow, the size of the contributing area and the associated volume runoff have to be limited (Urbonas, 1992). To prevent concentrated flows from forming, it is advisable to have each filter strip serve a contributing area of five acres or less (Schueler, 1987). When used alone, filter strip application is in areas where impervious cover is low to moderate and where there are small fluctuations in peak flow.

(3) *Longitudinal slope is five percent or less.* When filter strips are used on steep or unstable slopes, the formation of rills and gullies can disrupt sheet flow (Urbonas, 1992). As a result filter strips will not function at all on slopes greater than 15 percent and may have reduced effectiveness on slopes between 6 to 15 percent.

3. The design should be based on the same methods detailed for swales. The referred geometry of a filter strip is rectangular, and this should be used when applying the design procedures of vegetated swales.

4. The following provisions apply specifically to filter strips (Horner, 1993):

(1) Slopes should be no greater than 15 percent and should preferably be lower than 5 percent, and be uniform throughout the strip after final grading.

(2) Hydraulic residence time normally no less than 9 minutes, and in no case less than 5 minutes.

(3) Average velocity no greater than 0.9 feet/second.

(4) Manning's friction factor (n) of 0.02 should be used for grassed strips, n of 0.024 if strip is infrequently mowed, or a selected higher value if the strip is wooded.

(5) The width should be no greater than that where a uniform flow distribution can be assured.

(6) **Average depth of flow (design depth) should be no more than 0.5 inches.**

(7) Hydraulic radius is taken to be equal to the design flow depth.

(8) A minimum of 8 feet is recommended for filter strip width.

5. Filter strips function best with longitudinal slopes less than 10 percent, and ideally less than 5 percent. As filter strip length becomes shorter, slope becomes more influential. Therefore, when a minimum strip length of 20 feet is utilized, slopes should be graded as close to zero as drainage permits (Schueler, 1987). With steeper slopes, terracing through using landscape timber, concrete weirs, or other means may be required to maintain sheet flow.

6. Calculate the flow rate of stormwater to be mitigated by the vegetated filter strip using the Method outlined in Chapter 9.

7. Another design issue is runoff collection and distribution to the strip, and release to a transport system or receiving water (Horner, 1985). Flow spreader devices should be used to introduce the flow evenly to the filter strip (Urbonas, 1992). Concentrated flow needs to use a level spreader to evenly distribute flow onto a strip. There are many alternative spreader devices, with the main consideration being that the overland flow spreader be distributed equally across the strip. Level spreader options include porous pavement strips, stabilized turf strips, slotted curbing, rock-filled trench, concrete sills, or plastic-lined trench that acts as a small detention pond (Yu and Kaighn, 1992). The outflow and filter side lip of the spreader should have a zero slope to ensure even runoff distribution (Yu and Kaighn, 1992). Once in the filter strip, most runoff from significant events will not be infiltrated and will require a collection and conveyance system. Grass-lined swales are often used for this purpose and can provide another BMP level. A filter strip can also drain to a storm sewer or street gutter (Urbonas, 1992).

8. Filter strips should be constructed of dense, soil-binding deep-rooted water resistant plants. For grassed filter strips, dense turf is needed to promote sedimentation and entrapment, and to protect against erosion (Yu and Kaighn, 1992). Turf grass should be maintained to a blade height of 2 to 4 inches. Most engineered, sheet-flow systems are seeded with specific grasses. The grass species chosen should be appropriate for the climatic conditions and maintenance criteria for each project.

9. Trees and woody vegetation have been shown to increase infiltration and improve performance of filter strips. Trees and shrubs provide many stormwater management benefits by intercepting some rainfall before it reaches the ground, and improving infiltration and retention through the presence of a spongy, organic layer of materials that accumulates underneath the plants (Schueler, 1987). As discussed previously in this section, wooded strips have shown significant increases in pollutant removal over grass strips. Maintenance for wooded strips is virtually non-existent, another argument for using trees and shrubs. However, there are drawbacks to using woody plants. Since the density of the vegetation is not as great as a turf grass cover, wooded filter strips need additional length to accommodate more vegetation. In addition, shrub and tree trunks can cause uneven distribution of sheet flow, and increase the possibility for development of gullies and channels. Consequently, wooded strips require flatter slopes than a typical grass cover strip to ensure that the presence of heavier plant stems will not facilitate channelization.

REFERENCES

1. M. E. Barret, R. D. Zuber, E. R. Collins, J. F. Malina, R. J. Charbeneau, and G. H.

Ward. 1993. *A Review and Evaluation of Literature Pertaining to the Quantity and Control of Pollution from Highway Runoff and Construction*, Center for Research in Water Resources, Bureau of Engineering Research, University of Texas at Austin, Austin, TX.

2. L. N. Boutiette and C. L. Duerring, 1994. *Massachusetts Nonpoint Source Management Manual, The Megamanual: A Guidance Document for Municipal Officials*, Massachusetts Department of Environmental Protection, Office of Watershed Management, Nonpoint Source Program, Boston, MA.
3. Camp, Dresser and McKee, Inc., Larry Walker Associates, 1993. *California Best Management Practices - Municipal*, California State Water Resources Council Board, Alameda, CA.
4. Colorado Department of Transportation, 1992, *Erosion Control and Stormwater Quality Guide*, Colorado Department of Transportation.
5. DEQ Storm Water Management Guidelines, Department of Environmental Quality, State of Oregon. http://waterquality.deq.state.or.us/wq/groundwa/swmgmtguide.htm
6. Florida Department of Transportation, 1994. *Water Quality Impact Evaluation Manual Training*, Course No. BT-05-0009, Florida Department of Transportation.
7. GKY and Associates, Inc. June 1996. *Evaluation and Management of Highway Runoff Water Quality*, Publication No. FHWA-PD-96-032. Prepared for: US Department of Transportation, Federal Highway Administration. Washington, DC.
8. R. R. Horner, 1993. *Biofiltration for Storm Runoff Water Quality Control*, prepared for the Washington State Department of Ecology, Center for Urban Water Resources Management, University of Washington, Seattle, WA.
9. R. R. Horner, 1985. *Highway Runoff Water Quality Research Implementation Manual*, Volumes 1 and 2, Federal Highway Administration, WA-RD 72.2, Department of Civil Engineering, FX-10, University of Washington, Seattle, WA.
10. Indiana County Conservation District. *Controlling Sediment Pollution from Light Duty Grave/Dirt Roads*, U.S. Environmental Protection Agency, Bureau of Land and Water Conservation and Indiana County Conservation District, PA.
11. *Low-Impact Development Design Manual*, November 1997. Department of Environmental Resources, Prince George's County, MD.
12. T. R. Schueler, 1987. *Controlling Urban Runoff: A Practical Manual for Planning and Designing Urban BMPs*, Department of Environmental Programs, Metropolitan Washington Council of Governments, Washington, DC.
13. T. R. Schueler, P. Kumble, and M. Heraty, 1992. *A Current Assessment of Urban Best Management Practices: Techniques for Reducing Nonpoint Source Pollution in the Coastal Zone*, Anacostia Research Team, Metropolitan Washington Council of Governments, Washington, DC.
14. B. R. Urbonas, J. T. Doerfer, J. Sorenson, J. T. Wulliman, and T. Fairley, 1992. *Urban Storm Drainage Criteria Manual, Volume 3 - Best Management Practices, Stormwater Quality, Urban Drainage and Flood Control District*, Denver, CO.
15. Ventura Countywide Stormwater Quality Management Program, *Draft BMP BF: Biofilters*, June 1999. Ventura, CA.
16. Washington State Department of Transportation, 1995. *Highway Runoff Manual*, Washington State Department of Transportation.
17. S. L. Yu,S. L. Kaighn, 1992. *VDOT Manual of Practice for Planning Stormwater Management*, Federal Highway Administration, FHWA/VA-R13, Virginia Department of Transportation Research Council, Charlottesville, VA.

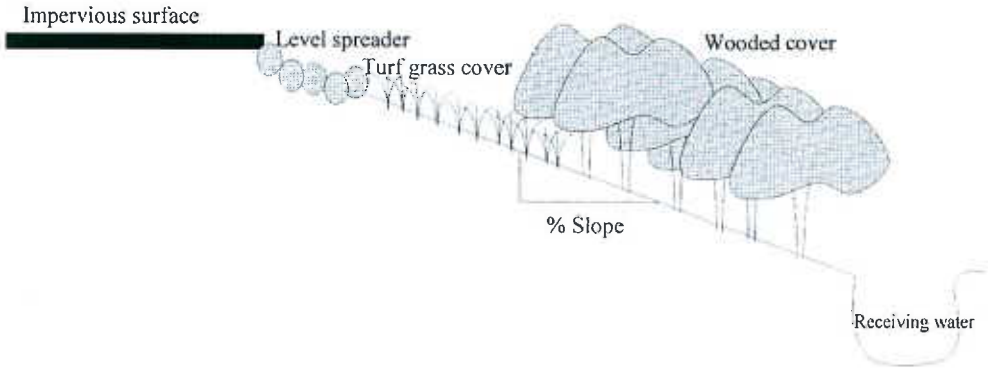

Figure PC-110A
Typical Buffer Strip (SUSMP, 2002)

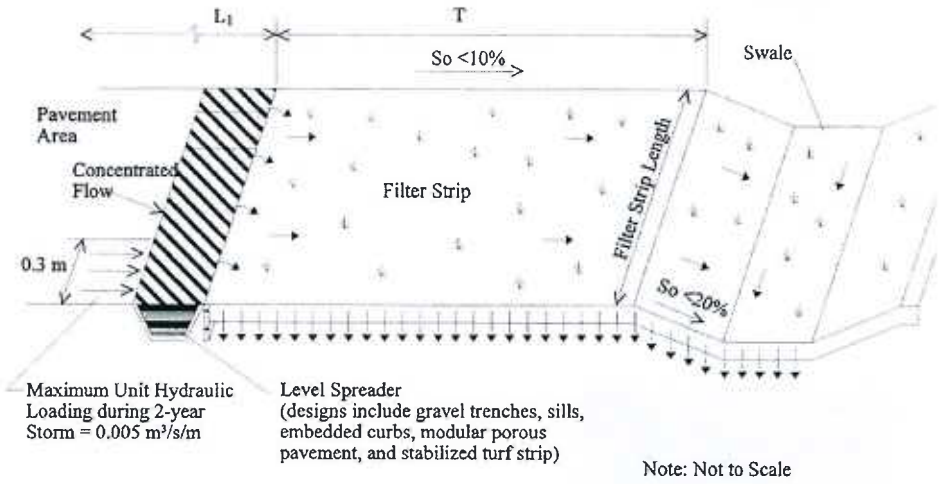

Figure PC-110B
Typical Buffer Strip Schematic (SUSMP, 2002)

BMP PC – 111
VEGETATIVE SWALE

DESCRIPTION

Vegetated swales are shallow vegetated channels to convey stormwater where pollutants are removed by filtration through grass and infiltration through soil. They look similar to, but are wider than, a ditch that is sized only to transport flow. They require shallow slopes and soils that drain well. Grassed swale designs have achieved mixed performance in pollutant removal efficiency. Moderate removal rates have been reported for suspended solids and metals associated with particulates such as lead and zinc. Runoff waters are typically not detained long enough to effectively remove very fine suspended solids, and swales are generally unable to remove significant amounts of dissolved nutrients. Pollutant removal capability is related to channel dimensions, longitudinal slope, and type of vegetation. Optimum design of these components will increase contact time of runoff through the swale and improve pollutant removal rates. Vegetated swales are primarily stormwater conveyance systems. They can provide sufficient control under light to moderate runoff conditions, but their ability to control large storms is limited. Therefore, they are most applicable in low to moderate sloped areas as an alternative to ditches and curb and gutter drainage. Their performance diminishes sharply in highly urbanized settings. Vegetated swales are often used as a pretreatment measure for other downstream BMPs, particularly infiltration devices. Enhanced vegetative swales utilize check dams and wide depressions to increase runoff storage and promote greater settling of pollutants.

ADVANTAGES

1. Relatively easy to design, install and maintain.
2. Vegetated areas that would normally be included in the site layout, if designed for appropriate flow patterns, may be used as a vegetated swale.
3. Relatively inexpensive.
4. Vegetation is usually pleasing to residents.

LIMITATIONS

1. Irrigation may be necessary to maintain vegetative cover.
2. Potential for mosquito breeding areas.
3. Possibility of erosion and channelization over time.
4. Requires dry soils with good drainage and high infiltration rates for better pollutant removal.
5. Not appropriate for pollutants toxic to vegetation.
6. Large area requirements may make this BMP infeasible for some sites.
7. Used to serve sites less than 10 acres in size, with slopes no greater than 5 percent.
8. The seasonal high water table should be at least 2 feet below the surface.
9. Buildings should be at least 10 feet from the top of bank

DESIGN CRITERIA

Several criteria should be kept in mind when beginning swale design. These provisions, presented below, have been developed through a series of evaluative research conducted on swale performance.

Criteria for optimum swale performance (Horner, 1993)		
Parameter	***Optimal Criteria***	***Minimum Criteria****
Hydraulic Residence Time	9 min	5 min
Average Flow Velocity	≤0.9 ft/s	***N/A***
Swale Width	8 ft	2 ft
Swale Length	200 ft	100 ft
Swale Slope	2 - 6%	1%
Side Slope Ratio (horizontal:vertical)	4 : 1	2 : 1

Note: * Criteria at or below minimum values can be used when compensatory adjustments are made to the standard design. Specific guidance on implementing these adjustments will be discussed in the design section.

The procedures described below were set forth by Horner, and unless otherwise cited, are set forth in *Biofiltration for Stormwater Runoff Quality Control*, published in 1993. The following steps are recommended to be conducted in order to complete a swale design:

(1) Determine the flow rate to the system.
(2) Determine the slope of the system.
(3) Select a swale shape (skip if filter strip design).
(4) Determine required channel width.
(5) Calculate the cross-sectional area of flow for the channel.
(6) Calculate the velocity of channel flow.
(7) Calculate swale length.
(8) Select swale location based on the design parameters.
(9) Select a vegetation cover for the swale.
(10) Check for swale stability.

Recommended procedures for each task are discussed in detail below.

1. *Determine Flow Rate to the System.* Calculate the flow rate of stormwater to be mitigated by the vegetated swale using the methods outlined in Chapter 9. Runoff from larger events should be designed to bypass the swale, consideration must be given to the control of channel erosion and destruction of vegetation. A stability analysis for larger flows (up to the 100-yr 24-hour) must be performed. If the flow rate approaches or exceeds 1 ft3/s, one or more of the design criteria above may be violated, and the swale system may not function correctly (Washington State Department of Transportation, 1995). Alternative measures to lower the design flow should be investigated. Possibilities include dividing the flow among several swales, installing detention to control release rate upstream, and reducing developed surface area to reduce runoff coefficient value and gain space for biofiltration (Horner, 1993).
2. *Determine the Slope of the System.* The slope of the swale will be somewhat dependent on where the swale is placed, but should be between the stated criteria of one and six percent.
3. *Select a Swale Shape.* Normally, swales are designed and constructed in a trapezoidal shape, although alternative designs can be parabolic, rectangular, and triangular. Trapezoidal cross-sections are preferred because of relatively wider vegetative areas and ease of maintenance (Khan, 1993). They also avoid the sharp corners present in V-shaped and rectangular swales, and offer better stability than the vertical walls of rectangular swales.
4. *Determine Required Channel Width.* Estimates for channel width for the selected shape can be obtained by applying Manning's Equation:

$$Q = \frac{1.486}{n} AR^{2/3} S^{1/2}$$

Where:
Q = Flow (ft3/s).
A = Cross-sectional area of flow (ft2).
Rh = Hydraulic radius of flow cross section (ft).
S = Longitudinal slope of biofilter (ft/ft).
n = Manning's roughness coefficient.

A Manning's n value of 0.02 is used for routine swales that will be mowed with some regularity. For swales that are infrequently mowed, use a Manning's n value of 0.024. A higher n value can be selected if it is known that vegetation will be very dense (Khan, 1993).

Because the channel is wide, the hydraulic radius approaches the flow depth. Substituting the geometric equations for a trapezoidal channel into Manning's equation, the bottom width (wb) and the top width (wt) for the trapezoid swale can be computed using the following equations:

$$w_b = \frac{Qn}{1.486 y^{1.67} S^{0.5}} - Zy \quad \text{and} \quad w_t = w_b + 2Zy$$

Where:
Q = Flow rate in ft3/s.
n = Manning's roughness coefficient
y = Depth of flow.
Z = The side slope in the form of Z:1.

Typically, the depth of flow in the channel (H) is set at 3 to 4 inches. Flow depth can also be determined by subtracting 2 inches from the expected grass height, if the grass type and the height it will be maintained is known. Values lower than 3 to 4 inches can be used, but doing so will increase the computed width of the swale (Washington State Department of Transportation, 1995).

Swale width computed should be between 2 to 8 feet. Relatively wide swales (those wider than 8 feet are more susceptible to flow channelization and are less likely to have uniform sheet flow across the swale bottom for the entire swale length. The maximum widths for swales is on the order of 10 feet, however widths greater than 8 feet should be evaluated to consider the effectiveness of the flow spreading design used and the likelihood of maintaining evenness in the swale bottom. Since length may be used to compensate for width reduction (and vice versa) so that area is maintained, the swale width can be arbitrarily set to 8 feet to continue with the analysis.

5. *Calculate Cross-Sectional Area.* Compute the cross-sectional area (A) for the swale.
6. *Calculate the Velocity of the Channel Flow.* Channel flow velocity (U) can be computed using the continuity equation

   V (ft/sec)=Q(cfs)/A(ft2)

This velocity should be less than 0.9 ft/s, a velocity that was found to cause grasses to be flattened, reducing filtration. A velocity lower than this maximum value is recommended to achieve the 9-minute hydraulic residence time criterion, particularly in shorter swales (at V = 0.9

ft/s, a 485-ft swale is needed for a 9-min residence time and a 269-ft swale for a 5-min residence time).

If the value of V suggests that a longer swale will be needed than space permits, investigate how the design flow Q can be reduced, or increase flow depth (y) and/or swale width (wt) up to the maximum allowable values and repeat the analysis.

7. *Calculate Swale Length.* Compute the swale length (L) using the following equation:

   L=60Vtr
   Where:
   L=length required to achieve residence time
   tr = Hydraulic residence time (in minutes).
   V=velocity of channel flow (ft/sec)
   Use tr = 9 min for this calculation.

If a swale length greater than the space will permit results, investigate how the design flow Q can be reduced. Increase flow depth (H) and/or swale width (wb) up to the maximum allowable values and repeat the analysis. If all of these possibilities are checked and space is still insufficient, t can be reduced, but to no less than 5 minutes. If the computation results in L less than 100 ft, set L = 100 ft and investigate possibilities in width reduction. This is possible through recalculating V at the 100-ft length, recomputing cross-sectional area, and ultimately adjusting the swale width wb using the appropriate equation.

8. *Select Swale Location.* Swale geometry should be maximized by the designer, using the above equations, and given the area to be utilized. If the location has not yet been chosen, it is advantageous to compute the required swale dimensions and then select a location where the calculated width and length will fit. If locations available cannot accommodate a linear swale, a wide-radius curved path can be used to gain length.

Sharp bends should be avoided to reduce erosion potential. Regardless of when and how site selection is performed, consideration should be given to the following site criteria:

Soil Type. Soil characteristics in the swale bottom should be conducive to grass growth. Soils that contain large amounts of clay cause relatively low permeability and result in standing water, and may cause grass to die. Where the potential for leaching into groundwater exists, the swale bottom may need to be sealed with clay to protect from infiltration into the resource. Compacted soils will need to be tilled before seeding or planting. If topsoil is required to facilitate grass seeding and growth, use 6 inches of the following recommended topsoil mix: 50 to 80 percent sandy loam, 10 to 20 percent clay, and 10 to 20 percent composted organic matter (exclude animal waste).

Slope. The natural slope of the potential location will determine the nature and amount of regrading, or if additional measures to reduce erosion and/or increase pollutant removal are required. Swales should be graded carefully to attain uniform longitudinal and lateral slopes and to eliminate high and low spots. If needed, grade control checks should be provided to maintain the computed longitudinal slope and limit maximum flow velocity (Urbonas, 1992).

Natural Vegetation. The presence and composition of existing vegetation can provide valuable information on soil and hydrology. If wetland vegetation is present, inundated conditions may exist at the site. The presence of larger plants, trees and shrubs, may provide additional stabilization along the swale slopes, but also may shade any grass cover established. Most grasses grow best in full sunlight, and prolonged shading should be avoided. It is preferable that

vegetation species be native to the region of application, where establishment and survival have been demonstrated.

9. *Select Vegetative Cover.* A dense planting of grass provides the filtering mechanism responsible for water quality treatment in swales. In addition, grass has the ability to grow through thin deposits of sediment and sand, stabilizing the deposited sediment and preventing it from being resuspended in runoff waters. Few other herbaceous plant species provide the same density and surface per unit area. Grass is by far the most effective choice of plant material in swales, however not all grass species provide optimum vegetative cover for use in swale systems. Dense turf grasses are best for vegetative cover.

   In areas of poor drainage, wetlands species can be planted for increased vegetative cover. Use wetland species that are finely divided like grass and relatively resilient. Invasive species, such as cattails, should be avoided to eliminate proliferation in the swale and downstream.

   Woody or shrubby plantings can be used for landscaping on the edge of side slopes, but not in the swale treatment area. Trees and shrubs can provide some additional stabilization, but also mature and shade the grass. In addition, leaf or needle drop can contribute unwanted nutrients, create debris jams, or interfere with waterflow through the system. If landscape plantings are to be used, selection and planting processes should be carefully planned and carried out to avoid these potential problems.

10. *Check Swale Stability.* The stability check is performed for the combination of highest expected flow and least vegetation coverage and height. Stability is normally checked for flow rate (Q) for the 100-yr, 24-h storm unless runoff from larger such events will bypass the swale. Q can be determined using the same methods mentioned for the initial design storm computation. The maximum velocity (Vmax) in ft/s, that is permissible for the vegetation type, slope, and soil conditions should be obtained.

REFERENCES

1. Camp, Dresser and McKee, Inc., Larry Walker Associates, 1993. *California Best Management Practices - Municipal*, California State Water Resources Council Board, Alameda, CA.
2. Colorado Department of Transportation, 1992, *Erosion Control and Stormwater Quality Guide*, Colorado Department of Transportation.
3. DEQ Storm Water Management Guidelines, Department of Environmental Quality,State of Oregon. http://waterquality.deq.state.or.us/wq/groundwa/swmgmtguide.htm
4. GKY and Associates, Inc. June 1996. *Evaluation and Management of Highway Runoff Water Quality*, Publication No. FHWA-PD-96-032. Prepared for: US Department of Transportation, Federal Highway Administration. Washington, DC.
5. R. R. Horner, 1993. *Biofiltration for Storm Runoff Water Quality Control*, prepared for the Washington State Department of Ecology, Center for Urban Water Resources Management, University of Washington, Seattle, WA.
6. Z. Khan, C. Thrush, P. Cohen, L. Kuzler, R. Franklin, D. Field, J. Koon, and R. Horner, 1993. *Biofiltration Swale Performance Recommendations and Design Considerations*, Washington Department of Ecology, University of Washington, Seattle, WA.
7. K. H. Lichten, June 1997. *Compilation of New Development Stormwater Treatment Controls in the San Francisco Bay Area*, Bay Area Stormwater Management Agencies Association, San Francisco, CA.
8. *Low-Impact Development Design Manual*, November 1997. Department of Environmental Resources, Prince George's County, MD.

9. T. R. Schueler, P. Kumble, and M. Heraty, 1992. *A Current Assessment of Urban Best Management Practices: Techniques for Reducing Nonpoint Source Pollution in the Coastal Zone*, Anacostia Research Team, Metropolitan Washington Council of Governments, Washington, DC.
10. B. R. Urbonas, J. T. Doerfer, J. Sorenson, J. T. Wulliman, and T. Fairley, 1992. *Urban Storm Drainage Criteria Manual, Volume 3 - Best Management Practices, Stormwater Quality, Urban Drainage and Flood Control District*, Denver, CO.
11. Ventura Countywide Stormwater Quality Management Program, *Draft BMP BF: Biofilters*, June 1999. Ventura, CA.
12. Washington State Department of Transportation, 1995. *Highway Runoff Manual*, Washington State Department of Transportation.
13. *Manual for the Standard Urban Stormwater Mitigation Plan (SUSMP)*, Los Angeles County Department of Public Works, September 2002.

BMP PC – 112
WET PONDS

DESCRIPTION

The wet pond or retention pond is a facility which removes sediment, Biochemical oxygen Demand (BOD), organic nutrients, and trace metals from stormwater runoff. This is accomplished by slowing down stormwater using an in-line permanent pool or pond effecting settling of pollutants. The wet pond is similar to a dry pond, except that a permanent volume of water is incorporated into the design. The drainage area should be such that an adequate base flow is maintained in the pond. Biological processes occurring in the permanent pond pool aid in reducing the amount of soluble nutrients present in the water, such as nitrate and ortho-phosphorus (Schueler, 1987).

The basic elements of a wet pond are shown below. A stabilized inlet prevents erosion at the entrance to the pond. It may be necessary to install energy dissipaters. The permanent pool is usually maintained at a depth between 3 and 8 ft. The shape of the pool can help improve the performance of the pond. Maximizing the distance between the inlet and outlet provides more time for mixing of the new runoff with the pond water and settling of pollutants. Overflow from the pond is released through outlet structures to discharge flows at various elevations and peak flow rates. The outfall channel should be protected to prevent erosion from occurring downstream of the outlet.

Soil conditions are important for the proper functioning of the wet pond. The pond is a permanent pool, and thus must be constructed such that the water must not be allowed to infiltrate from the permanent portion of the pool. It is difficult to form a pool in soils with high infiltration rates soon after construction. Eventually, however, deposition of silt at the bottom of the pond will help slow infiltration. If extremely permeable soils exist at the site (hydrologic soil group A or B), a geotextile or clay liner may be necessary.

ADVANTAGES

1. Wet ponds have recreational and aesthetic benefits due to the incorporation of permanent pools in the design.
2. Wet ponds offer flood control benefits in addition to water quality benefits.
3. Wet ponds can be used to handle large drainage areas.
4. High pollutant removal efficiencies for sediment, total phosphorus, and total nitrogen are achievable when the volume of the permanent pool is at least three times the water quality volume (the volume to be treated).
5. A wet pond removes pollutants from water by both physical and biological processes, thus they are more effective at removing pollutants than extended/dry detention basins.
6. Creation of aquatic and terrestrial habitat.

LIMITATIONS

1. Wet ponds may be feasible for stormwater runoff in residential or commercial areas with a combined drainage area greater than 20 acres but no less than 10 acres.
2. An adequate source of water must be available to ensure a permanent pool throughout the entire year.
3. If the wet pond is not properly maintained or the pond becomes stagnant; floating debris, scum, algal blooms, unpleasant odors, and insects may appear.

4. Sediment removal is necessary every 5 to 10 years.
5. Heavy storms may cause mixing and subsequent resuspension of solids.
6. Evaporation and lowering of the water level can cause concentrated levels of salt and algae to increase.
7. Cannot be placed on steep unstable slopes.
8. Could be regulated as a wetlands or Waters of the US by IDEM.
9. Embankment may be regulated as a dam by IDNR.

DESIGN CRITERIA

1. *Hydrology*. If the device will also be used for stormwater quantity control, it will be necessary to reduce the peak flows after development to the levels described in Chapter 6.
2. *Volume*. Calculate the volume of stormwater to be mitigated by the wet pond using the water quality volume calculations in Chapter 9. The volume of the permanent pool should be 3 times this water quality volume.
3. *Pond Shape*. The pond should be long and narrow and generally shaped such that it discourages "short-circuiting." Short-circuiting occurs when storm flows by-pass the pond and do not mix well with the pool and simply by-pass the pond. Short-circuiting can be discouraged by lengthening the pond or by installing baffles which slow water down and lengthen the distance between the inlet and outlet. A length to width ratio of no less than 2:1, with 4:1 being preferred, will help minimize short circuiting. Also, the pond should gradually expand from the inlet and gradually contract toward the outlet. Several examples of ponds shaped to reduce short-circuiting are shown below.
4. *Depth*. The depth of the water quality pond is important in the design of the pond. If the pond is too shallow, sediment will be easily resuspended as a result of wind. Shallow ponds should not be used unless vegetation is adequate to stabilize the pond. If the pond is too deep, safety considerations emerge and stratification may occur, possibly causing anoxic conditions near the bottom of the pond. If the pond becomes anoxic, pollutants adsorbed to the bottom sediments may be released back to the water column. The average depth should be 3 to 6 ft, and depths of more than 8 ft should be avoided (Schueler, 1987). A littoral zone of 6 to 18 inches deep that accounts for 25 to 50 percent of the permanent pool surface for plant growth along the perimeter of the pool is recommended, the littoral shelf will also enhance safety.
5. *Vegetation*. Planting vegetation around the perimeter of the pond can have several advantages. Vegetation reduces erosion on both the side slopes and the shallow littoral areas. Vegetation located near the inlet to the pond can help trap sediments; algae growing on these plants can also filter soluble nutrients in the water column. Thicker, higher vegetation can also help hide any debris which may collect near the shoreline. Native turf-forming grasses or irrigated turf should be planted on sloped areas, and aquatic species should be planted on the littoral areas (Urbonas, et al., 1992). Vegetation can benefit wildlife and waterfowl by providing food and cover at the marsh fringe. A shallow, organic-rich marsh fringe provides an area which enables bacteria and other microorganisms to reduce organic matter and nutrients (Schueler, 1987).
6. *Side Slopes*. Gradual side slopes of a wet pond enhance safety and help prevent erosion and make it easier to establish dense vegetation. If vegetation cannot be established, the unvegetated banks will add to erosion and subsequently the sediment load. It is recommended that side slopes be no greater than 3:1. If slopes are greater than this, riprap should be used to stabilize the banks (Schueler, 1987).
7. *Hydraulic Devices*. An outlet device, typically a riser-pipe barrel system, should be designed to release runoff in excess of the water quality volume and to control storm peaks. The outlet device should still function properly when partial clogging occurs. Plans should provide details on all culverts, risers, and spillways. Calculations should depict inflow, storage, and outflow characteristics of the design. Some frequently used design details for extending detention times in wet ponds are shown and described below (Schueler, 1987):

a. *Slotted Standpipe from Low-Flow Orifice, Inlet Control (dry pond, shallow wet pond, or shallow marsh).* An "L"-shaped PVC pipe is attached to the low-flow orifice. An orifice plate is located within the PVC pipe which internally controls the release rate. Slots or perforations are all spaced vertically above the orifice plate, so that sediment deposited around the standpipe will not impede the supply of water to the orifice plate.

b. *Negatively Sloped Pipe from River (wet ponds or shallow marshes)* This design was developed to allow for extended detention in wet ponds. The release rate is governed merely by the size of the pipe. The risk of clogging is largely eliminated by locating the opening of the pipe at least 1 ft below the water surface where it is away from floatable debris. Also, the

negative slope of the pipe reduces the chance that debris will be pulled into the opening by suction. As a final defense against clogging, the orifice can be protected by wire mesh.

c. *Hooded Riser (wet ponds).* In this design, the extended detention orifice is located on the face of the riser near the top of the permanent pool elevation. The orifice is protected by wire mesh and a hood, which prevents floatable debris from clogging the orifice.

8. *Inlet and Outlet Protection.* The inlet pipe should discharge at or below the water surface of the permanent pool. If it is above the pool, an outlet energy dissipater will protect the banks and side slopes of the pond to avoid erosion. The stream channel just downstream of the pond outlet should be protected from scouring by placing riprap along the channel. Also, the slope of the outlet channel should be close to 0.5 percent. Riprap between 18 and 30 inches should be used. If the outlet pipe is less than 24 inches, 9 to 12 inches riprap may be used. Stilling basins may also be installed to reduce flow velocities at the outfall (Schueler, 1987).
9. *Forebay.* A forebay may be installed as part of the wet pond to capture sand and gravel sediment. The forebay should be easily accessible for dredging out the sediment when necessary and access to the forebay for equipment should be provided. The forebay volume should typically be 5 to 10 percent of the water quality volume. If there are multiple inlets to the detention facility, each forebay should be sized based on the portion of water quality volume attributed to the particular inlet.
10. *Emptying Time.* A 12 to 48 hour emptying time may be used for the water quality volume above the permanent pool (Urbonas, et al., 1992).
11. *Freeboard.* The pond embankment should have at least 1 ft of freeboard above the emergency spillway crest elevation (Schueler, 1987).

REFERENCES

1. Camp, Dresser and McKee, Inc., Larry Walker Associates, 1993. *California Best Management Practices - Municipal*, California State Water Resources Council Board, Alameda, CA.
2. GKY and Associates, Inc. June 1996. *Evaluation and Management of Highway Runoff Water Quality*, Publication No. FHWA-PD-96-032. Prepared for: US Department of Transportation, Federal Highway Administration. Washington, DC.
3. K. H. Lichten, June 1997. *Compilation of New Development Stormwater Treatment Controls in the San Francisco Bay Area*, Bay Area Stormwater Management Agencies Association, San Francisco, CA.
4. T. R. Schueler, 1987. *Controlling Urban Runoff: A Practical Manual for Planning and Designing Urban BMPs*, Department of Environmental Programs, Metropolitan Washington Council of Governments, Washington, DC.
5. B. R. Urbonas, J. T. Doerfer, J. Sorenson, J. T. Wulliman, and T. Fairley, 1992. *Urban Storm Drainage Criteria Manual, Volume 3 - Best Management Practices, Stormwater Quality, Urban Drainage and Flood Control District*, Denver, CO.
6. *Manual for the Standard Urban Stormwater Mitigation Plan (SUSMP)*, Los Angeles County Department of Public Works, September 2002.

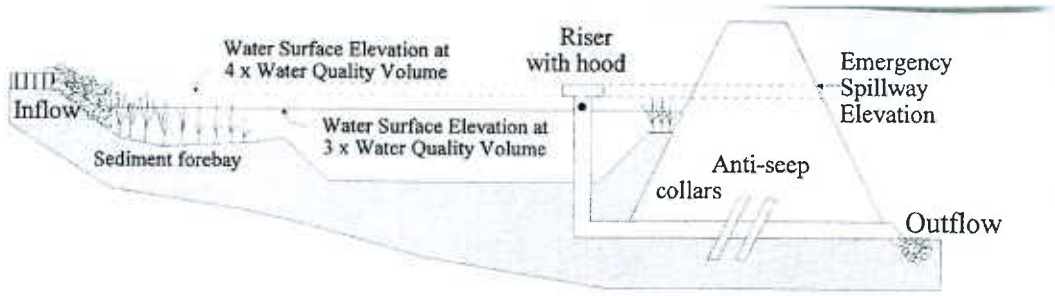

Figure PC-112A
Typical Wet Pond Components (SUSMP, 2002)

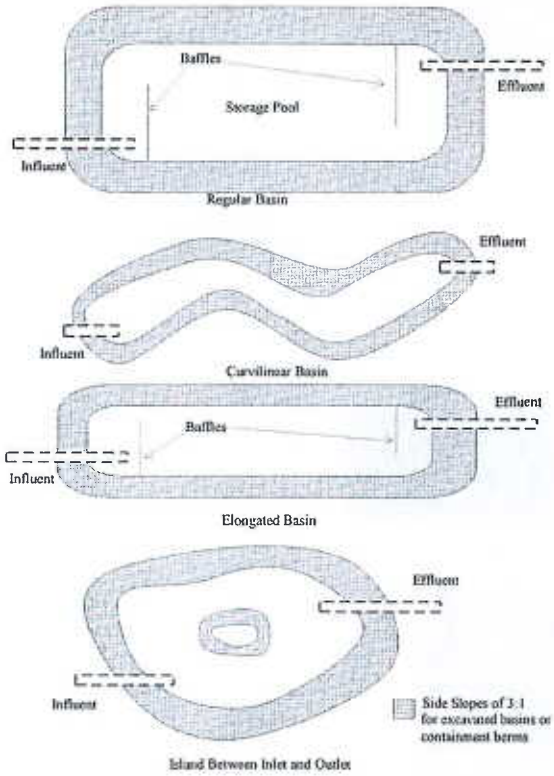

Figure PC-112B
Strategies to Increase residence time in detention facilities (SUSMP, 2002)

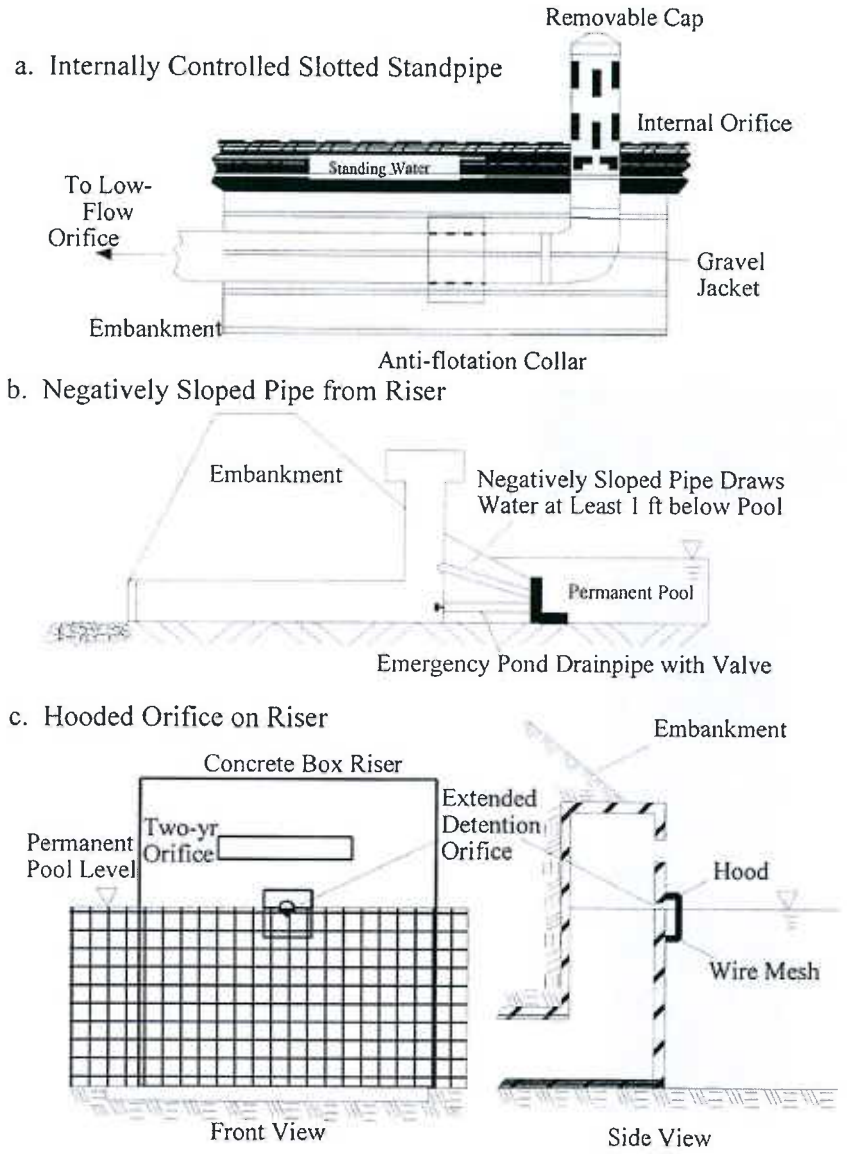

Figure PC-112C
Typical Outlet Structure Modifications to increase residence time of water quality volume (SUSMP, 2002)